Company Profile

As the 1st generation of outstanding private enterprises in China's reform and opening up, after nearly four decades of unremitting efforts and with the long-term trust and support of customers and partners, Delixi Group joined forces with Schneider Electric, a Fortune Global 500 company, to establish Delixi Electric Co., Ltd. (herein-after referred to as "Delixi Electric") in 2007.

Delixi Electric has businesses covering three major fields, namely power distribution, industrial automation control, and household electrical, committed to a professional, safe, reliable, efficient & nice industrial automation and household electricity environment for customers in emerging markets worldwide with high-quality and more excellent products & services, exploring a new model for the development of enterprises in China's low-voltage electrical industry.

Focusing on the interests of customers & partners, we adhere to the business philosophy of technological innovation, quality assurance, five-star service, and brand driver to create a new ecosystem across the electrical industry chain. So far, we have business footprints across China and 60 countries & regions around the globe, with 4 large automated industrial production bases and 15 logistics centers, committed to creating the best closed-loop customer experience in the world.





Power distribution | Industrial control automation | Household electrical

SPD Product List

Inverter Model	Rated Input Current (A)	Rated Output Current (A)	Adaptive Motor (kW)	Installation Dimension (Unit:mm) W	W1	H	H1	D	D1	Φd	Appearance
SS2 / S2 (1-phase 220V,50/60Hz)											
CDI-SPDG0R4SS2	9.5	5.0	0.4	84	74	152	140	148.4	141	5.5	Model 1
CDI-SPDG0R4S2	6.5	3.0	0.4								
CDI-SPDG0R7S2	9.5	5.0	0.7								
CDI-SPDG0R7SS2	15.7	7.0	0.7	105	95	165	153	161.4	154	5.5	Model 2
CDI-SPDG1R5SS2	27.0	10.0	1.5								
CDI-SPDG1R5S2	15.7	7.0	1.5								
CDI-SPDG2R2S2	27.0	10.0	2.2								
CDI-SPDG2R2SS2	29.4	14.0	2.2	145	133	230	218	177.4	170	5.5	Model 3
CDI-SPDG4R0SS2	32.8	17.0	4								
CDI-SPDG4R0S2	32.8	17.0	4								
CDI-SPDG5R5SS2	51.5	25.0	5.5	180	168	285	273	167.4	160	5.5	Model 4
CDI-SPDG5R5S2	51.5	25.0	5.5								
T2 (3-phase 220V,50/60Hz)											
CDI-SPDG4R0T2	18.5	17.0	4	145	133	230	218	177.4	170	5.5	Model 3
CDI-SPDG5R5T2	26.0	25.0	5.5	180	168	285	273	167.4	160	5.5	Model 4
T4 (3-phase 380V, 50/60Hz)											
CDI-SPDG0R7T4	3.4	3.0	0.7	84	77	152	144	148.4	141	4.5	Model 1
CDI-SPDG1R5T4	5.0	4.5	1.5								
CDI-SPDG2R2T4	6.8	6.0	2.2	105	95	165	155	161.4	154	4.5	Model 2
CDI-SPDG4R0T4	10.5	9.5	4								
CDI-SPDG5R5T4	15.5	13.0	5.5	145	133	230	218	177.4	170	5.5	Model 3
CDI-SPDG7R5T4	20.5	17.0	7.5								
CDI-SPDG011T4	26.0	25.0	11	180	168	285	273	167.4	160	5.5	Model 4
CDI-SPDG015T4	35.0	32.0	15								
CDI-SPDG018.5T4	38.5	37.0	18.5	260	245	340	325	223	210.5	5.5	Model 5
CDI-SPDG022T4	46.5	45.0	22								
CDI-SPDG030T4	62	60	30	250	160	430	415	235.5	222	7	Model 6
CDI-SPDG037T4	76	75	37								
CDI-SPDG045T4	92	90	45	300	240	530	515	285.5	272	9	Model 7
CDI-SPDG055T4	113	110	55								
CDI-SPDG075T4	157	152	75	340	260	580	565	328.5	315	9	Model 8
CDI-SPDG090T4	180	176	90								
CDI-SPDG110T4	214	210	110								
CDI-SPDG132T4	256	253	132	400	300	940	910	367	336	13	Model 9
CDI-SPDG160T4	305	300	160								
CDI-SPDG185T4	344	340	185								
CDI-SPDG200T4	383	380	200	514	400	1235	1200	400	360	14	Model 10
CDI-SPDG220T4	425	420	220								
CDI-SPDG250T4	484	480	250	545	400	1345	1310	400	360	14	Model 11
CDI-SPDG280T4	543	540	280								
CDI-SPDG315T4	605	600	315								
CDI-SPDG355T4	683	680	355	545	400	1450	1415	400	360	14	
CDI-SPDG375T4	714	710	375								
CDI-SPDG400T4	753	750	400								

Ordering Instructions:
please mark the product model and specification when placing an order. It is recommended to supplement other data, such as motor parameters and load. For any special requirements, please contact our Technology Department.

DELIXI
ELECTRIC

CDI-SPD Series
Solar Pump VFD

AC 1 PH 220±15%V, 0.4-5.5kW

AC 3 PH 220±15%V, 4.0-5.5kW

AC 3 PH 380±15%V, 0.7-400kW



Protect Electricity Safety Create Beauty Of Life

DELIXI
ELECTRIC

CDI-SPD Series is a variable frequency drive for PV Power AC Pump, it converts direct current, which from solar module array, to alternating current for driving different type of AC pump.

For maximizing the drive of pump motor, the product adopts high-precision and fast MPPT algorithm to track the Maximum Power Point of output of the solar module. Meanwhile, AC input from power grid or generator is accepted, when there is an insufficient power from solar module, for whole day running and diverse requirements.



Technical Characteristics:

■ **Excellent performance**

Built-in high-precision fast MPPT algorithm to track the maximum power of the solar module, up to 99% efficiency.

■ **Rich Models**

Support single-phase 220V, three-phase 220V and three-phase 380V water pump, power range from 0.4kW to 400kW.

■ **Safe & Reliable**

With over-voltage protection, over-current protection, over-temperature automatic frequency reduction and other protection functions; DC input anti-reverse connection function.

■ **Easy operation**

Easy to install, no need to set parameters, ready to use, and has a parameter one-key recovery function.

■ **Wide Application**

In addition to the DC power input, AC power input is also acceptable.

Data and Naming Rules of Nameplate



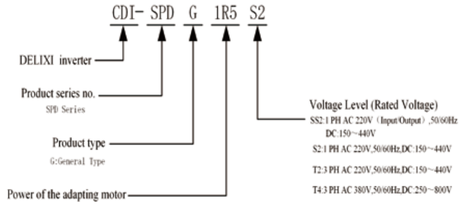

Technical Specification

Item			Specification
Control	Control mode		MPPT model，V/F model
	Overload capability		150% for 1min, 190% for 3s
Configuration	Control power supply P24V		Max. output current: 300mA
	Input terminal	SPD series (0.4kW~15kW)	4-way digital input terminal (DI1~DI4): DI1 supports forward rotation; DI2 supports reverse rotation, DI3 supports full water alarm function and DI4 supports input of AC/DC auto switching quantity.
		SPD series (18.5kW and above)	5-way digital input terminal (DI2~DI6): DI2 supports reverse rotation; DI3 supports full water alarm function, DI4 supports input of AC/DC auto switching quantity; DI5 and DI6 support setting of other functions.
Running	Running method		Running via keyboard, terminal and communication
	Timing control		can realize the inverter reaches a given time and automatically stops
Communication			SPD series(0.4kW~15kW)the control board no RS485communication terminal，requires an external communication expansion card，SPDseries(18.5kW and above) control board directly has an RS485 communication interface and supports standard MODBUS-RTU protocol
Display	Running information		Output current, output voltage, bus voltage, output frequency, etc.
	Error information		In running status of fault protection, the information of each fault includes the frequency, current, busbar voltage, input/output terminal status at fault condition.
Protection	Inverter protection		Overcurrent, overvoltage, undervoltage, overheating, overload, phase loss protection, external fault protection, etc.
	Inverter alarm		Sleep alarm, low-frequency alarm, full water alarm and interruption alarm.
Environment	Ambient temperature		-10°C~40°C
	Storage environment		-20°C~65°C
	Ambient humidity		MAX 90%RH(no condensation)
	Height / vibration		1000m or less, 5.9m / s² (= 0.6g) or less
	Application location		No corrosive gas, flammable gas, oil mist or dust and other
Cooling method			Forced air cooling

Water pumping system

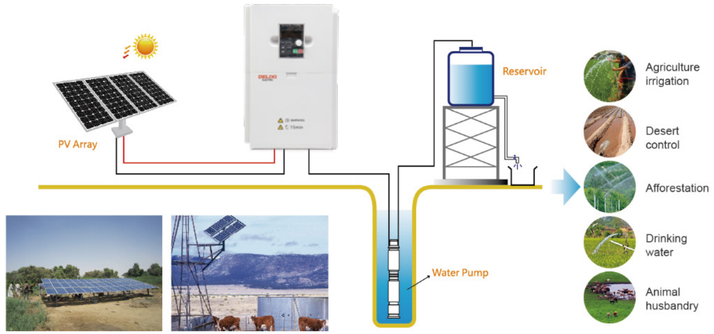

Appearance

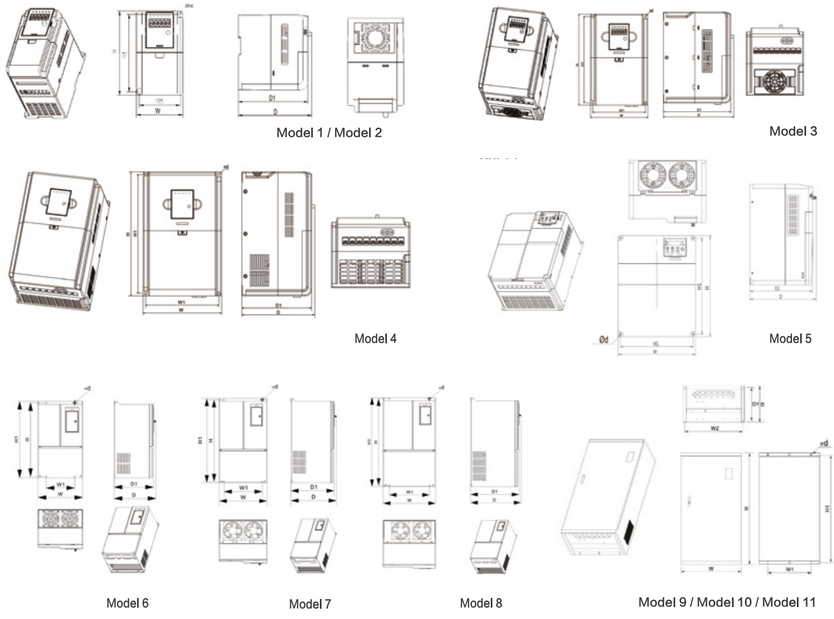

Wiring diagram of the main circuit and control circuit

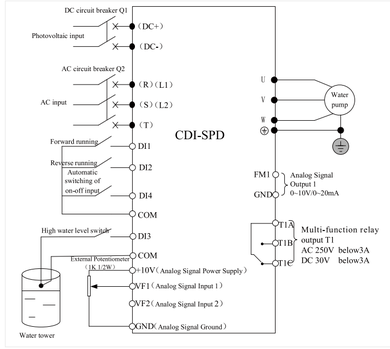

Description of the Main Circuit Terminals of Frequency Inverter:

Identification	Name	Function Description
R, S, T (L1, L2)	AC input	3-phase (single-phase) AC input terminal, connected to power grid
DC+, DC-	PV DC input	Input terminal of PV cell panel
U, V, W	Output of frequency Inverter	3-phase (single-phase) AC output terminal, generally connected to the motor of water pump
⏚	Safe protection earthing	Safe protection earthing terminal; each machine must be earthed reliably