@ 2026

Facebook

Instagram

LinkedIn

Youtube

DELIXI HANGZHOU INVERTER CO.,LTD.

Address: No. 8, Zhuantang Technical & Economic Block, Zhuantang Sub-district, Xihu District, Hangzhou City

Website: www.delixidrive.com Email:delixidrive@delixi-electric.com

DELIXI
ELECTRIC



Delixi Electric Inverter/Soft starter

Product Selection Catalog

Crafted with Integrity Driving the Future

Guard the safe use of electricity Create the beauty of life

Company Profile

As the 1st generation of outstanding private enterprises in China's reform and opening up, after nearly four decades of unremitting efforts and with the long-term trust and support of customers and partners, Delixi Group joined forces with Schneider Electric, a Fortune Global 500 company, to establish Delixi Electric Co., Ltd. (hereinafter referred to as "Delixi Electric") in 2007.

Delixi Electric has businesses covering three major fields, namely power distribution, industrial automation control, and household electrical, committed to a professional, safe, reliable, efficient & nice industrial automation and household electricity environment for customers in emerging markets worldwide with high-quality and more excellent products & services, exploring a new model for the development of enterprises in China's low-voltage electrical industry.

Focusing on the interests of customers & partners, we adhere to the business philosophy of technological innovation, quality assurance, five-star service, and brand driver to create a new ecosystem across the electrical industry chain. So far, we have business footprints across China and 60 countries & regions around the globe, with 4 large automated industrial production bases and 15 logistics centers, committed to creating the best closed-loop customer experience in the world.







400-135-8863

Delixi (Hangzhou) Inverter Co., Ltd, a key member of Sino-French joint venture Delixi Electric Co., Ltd.,is a national high-tech enterprise recognized as a "Specialized, Refined, Distinctive, and Innovative SME" in Zhejiang Province. Specializing in the field of industrial automation control, it is a leading domestic supplier of industrial automation products and solutions, integrating R&D, production, sales, and technical services.

Committed to independent innovation, the company has established a comprehensive R&D system equipped with six laboratories and testing zones, including electromagnetic compatibility, environmental reliability, high-precision dynamic performance, and industry-specific machinery. It is designated as a High-tech Enterprise R&D Center in Hangzhou. The company operates a standardized production base and continuously adopts advanced domestic and international technologies as well as state-of-the-art production and testing equipment. Its facilities include multiple automated production lines, an intelligent SMT workshop, and automated conformal coating systems. The company is also ISO9001:2015 certified for international quality management.

With over 20 years of development, the company has built a diverse portfolio of industrial control products, including frequency inverter, servo drive, soft starter, HMI, PLC, and industry-tailored solutions. Its technologies span the information interaction layer, control layer, drive layer, and execution layer. Having accumulated comprehensive solutions across industries such as machine tools, textiles, packaging, printing, woodworking, logistics, and food processing, the company significantly enhances its customers' automation and production efficiency.

To better serve its clients, the company has established a systematic nationwide sales and service network with branch offices and technical service centers in key cities. It also actively expands into emerging international markets, continually improving its global sales network through overseas offices that integrate marketing and service. Products are now exported to regions including Southeast Asia, Central Asia, the Middle East, South America, and Africa, with export volume growing rapidly year by year.

"Crafted with Integrity, Driving the Future." Upholding the core values of "Customer First, Collaboration, Agility, Innovation, and Excellence," Delixi (Hangzhou) Inverter Co., Ltd remains dedicated to continuous innovation, earning the trust of its customers through high-quality products and exceptional service.











H500-VFD 2025 CIIF
Industrial Automation Award

















DELIXI ELECTRIC

Comprehensive solution architecture diagram for industrial automation control products

Information Interaction Layer

Motion Control Layer

Drive Layer

Actuator Layer



PC



Mobile Terminal



Industrial Personal Computer



HMI



Mobile Terminal



CNC

EtherCAT | EtherNET | CANopen | PROFIBUS | PROFINET | RS485

MECHATROLINK-III

EtherCAT



Network Module / Bluetooth Module



Motion Controller



PLC



Specialized Controller



H500 Frequency Inverter



H300 Frequency Inverter



H80 Frequency Inverter



EM60 Frequency Inverter



CDRA Soft Starter

CDS581 Spindle Servo Drive

CDS560 Servo Drive

CDS590 Servo Drive

CDSD6Q Crane-specific Frequency Inverter

ES80 PMSM Specialized Frequency Inverter

CDS500 Bus-type Servo Drive

CDS560 Bus-type Servo Drive



Asynchronous Motor



PMSM



Asynchronous Motor



Spindle Servo Motor



Servo Motor



Servo Motor



Asynchronous Motor



PMSM



Servo Motor



Servo Motor

Catalogue

H500 Series VFD 01–06

H300 Series VFD 07–12

H80 Series VFD 13–17

H Series VFD Technical Specifications 18–20

E180 Series VFD 21–26

E100/E102/E106 Series VFD 27–30

EM60 Series VFD 31–34

E Series VFD Technical Specifications 35–37

E Series VFD Wiring diagram、keyboard、expansion card 37–40

CDRA / CDRAK3 Soft Starter 41–50

CDRAZX Soft Starter 51–54

iF DESIGN AWARD 2025 WINNER

VFD-H500

Product / Industry / Tools / ID: 697509

DESIGN

DELIXI ELECTRIC LTD
Dongming HU, Yingzhi GUAN,
Leihong Zheng
Shanghai, China

CLIENT/MANUFACTURER

DELIXI ELECTRIC LTD
Shanghai, China

DESIGN AWARD 2025

Congratulations! We are pleased to honor you with an iF DESIGN AWARD

Uwe Cremering
CEO of iF Design

Karen Korellis Reuther
Jury Chairperson

Fritz Frenkler
Jury Chairperson

H500

（0.4kW ~ 630kW）

The H500 series inverter is a general-purpose high-performance current vector inverter that adopts the family design of Delixi Electric and has won the 2025 German IF Product Design Award.

The H500 has the advantages of Agile and easy-to-use, rich configuration, superior performance, strong scalability, safe and reliable, and is equipped with Delixi Electric's unique "DHI-LINK" communication protocol, which can achieve fast and stable interconnection and transformation from single to multiple units! Mainly used to control and regulate the speed and torque of three-phase AC asynchronous motors, it can be used to drive various automated production equipment in industries such as petroleum, chemical, mining, lifting, machine tools, cables, hydraulic, woodworking, textile, packaging, etc.









Nameplates and Naming Rules

DELIXI
ELECTRIC

Reference: H500G18R5P22T4BLDS
Input: AC 3PH 380V~480V 42/51A 50/60Hz
Output: AC 3PH 0V~480V 37/45A 0~599Hz 18.5/22kW
Hardware Version: 1.0.01 Software Version:1.01
SN：G18R5P22T4BLDS25B000001

DELIXI HANGZHOU INVERTER CO.,LTD.



H500 G18R5P22 T4 B L D S
① ② ③ ④ ⑤ ⑥ ⑦

SN	Field	Description	
①	Product series Number	**H500:** H500 series	
②	Product type and power	**G:**Heavy load **18R5**: It indicates the power of applicable motor is 18.5kW	
		P: Light load **22**: It indicates the power of applicable motor is 22kW	
③	Voltage grade	**T4**: 3-phase 380V~480VAC, 50/60Hz	
④	Braking unit	**Blank:** None	**B:** Built-in braking unit
⑤	Reactor	**Blank:** See the Description below*	**L:** Including DC reactor, applicable to the model with SIZE5 outline structure
		A: Including output AC reactor, applicable to the model with SIZE10~SIZE12 outline structure	**C:** With auxiliary distribution cabinet, applicable to the model with SIZE13 outline structure
⑥	Keyboard Configuration	**Blank:** HLED00NNKA500 (LED, Standard version, With potentiometer)	**D:** No Keyboard
		E: HLED00NNNA500 (LED, No potentiometer)	**F:** HLED00NBKA500 (LED, With Bluetooth,with potentiometer)
		G: HLED00NBNA500 (LED, With Bluetooth,No potentiometer)	**I:** HLCD01NNNA500 (LCD, English)
		For more keyboard configuration information, please refer to the instruction manual	
⑦	Safety functions	**Blank:** None	**S:** Including STO function

Note:

- 3-phase 380V~480V, SIZE1 to SIZE4 do not support optional reactors,SIZE5 and above models with DC reactors standard.
- 3-phase 380V~480V, Built-in brake units are standard for SIZE1~SIZE4, optional for SIZE5~SIZE8, and not supported for SIZE9 and above

Product Selection

Type	Appearance structure	Power range	Heavy load type				Light load type				BRAKE UNIT	DC reactor
			Power capacity (kVA)	Input current (A)	Output current (A)	Adapt motor (kW)	Power capacity (kVA)	Input current (A)	Output current (A)	Adapt motor (kW)		
Rated Voltage: Three-phase 380V~480VAC,50/60Hz												
H500G0R4P0R75T4B	SIZE1	0.4kW ~ 3.0kW	2	2.2	1.6	0.4	2.8	4.4	3	0.75	standard configuration	/
H500G0R75P1R1T4B			2.8	4.4	3	0.75	4.1	5	3.5	1.1		
H500G1R1P1R5T4B			4.1	5	3.5	1.1	5	6	4.5	1.5		
H500G1R5P2R2T4B			5	6	4.5	1.5	6.7	6.8	6	2.2		
H500G2R2P3R0T4B			6.7	6.8	6	2.2	9.5	9	7.5	3		
H500G3R0P4R0T4B			9.5	9	7.5	3	12	11	9.5	4		
H500G4R0P5R5T4B	SIZE2	4.0kW ~ 5.5kW	12	11	9.5	4	17.5	15.5	13	5.5		
H500G5R5P7R5T4B			17.5	15.5	13	5.5	22.8	20.5	17	7.5		
H500G7R5P11T4B	SIZE3	7.5kW ~ 11kW	22.8	20.5	17	7.5	33.4	26	25	11		
H500G11P15T4B			33.4	26	25	11	42.8	35	32	15		
H500G15P18R5T4B	SIZE4	15kW	42.8	35	32	15	33	38.5	37	18.5		
H500G18R5P22T4(B)L	SIZE5	18.5kW ~ 22kW	33	38.5	37	18.5	39	46.5	45	22	Optional	standard configuration
H500G22P30T4(B)L			39	46.5	45	22	52	62	60	30		
H500G30P37T4(B)L	SIZE6	30kW ~ 37kW	52	62	60	30	63	76	75	37		
H500G37P45T4(B)L			63	76	75	37	81	92	90	45		
H500G45P55T4(B)L	SIZE7	45kW ~ 55kW	81	92	90	45	97	113	110	55		
H500G55P65T4(B)L			97	113	110	55	110	134	130	65		
H500G65P75T4(B)L	SIZE8	65kW ~ 110kW	110	134	130	65	127	157	152	75		
H500G75P90T4(B)L			127	157	152	75	150	180	176	90		
H500G90P110T4(B)L			150	180	176	90	180	214	210	110		
H500G110P132T4(B)L			180	214	210	110	220	256	253	132		
H500G132P160T4L	SIZE9	132kW ~ 160kW	220	256	253	132	263	305	300	160	/	standard configuration
H500G160P185T4L			263	305	300	160	278	344	340	185		
H500G185P200T4L	SIZE10	185kW ~ 220kW	278	344	340	185	334	383	380	200		
H500G200P220T4L			334	383	380	200	375	425	420	220		
H500G220P250T4L			375	425	420	220	404	484	480	250		
H500G250P280T4L	SIZE11	250kW ~ 315kW	404	484	480	250	453	543	540	280		
H500G280P315T4L			453	543	540	280	517	605	600	315		
H500G315P355T4L			517	605	600	315	565	683	680	355		
H500G355P375T4L	SIZE12	355kW ~ 450kW	565	683	680	355	596	714	710	375		
H500G375P400T4L			596	714	710	375	629	753	750	400		
H500G400P450T4L			629	753	750	400	715.5	864	860	450		
H500G450P500T4L			715.5	864	860	450	766	964	930	500		

*Note: The parentheses in the model indicate optional accessories

Appearance and installation dimensions

(Unit: mm)

SIZE1-SIZE6

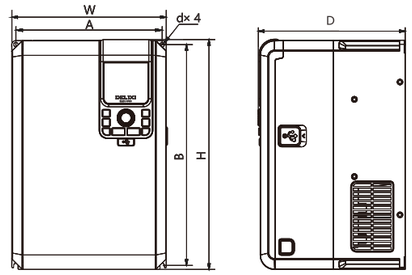

SIZE7-SIZE9

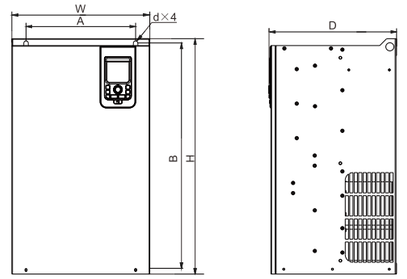

Appearance structure	Mounting hole (mm)		Outline dimensions (mm)			Installation hole diameter (mm)
	A	B	H	W	D	d×4
SIZE1	119	194	205	130	160	Ø5
SIZE2	119	194	205	130	170	Ø5
SIZE3	144	244	254	155	181.5	Ø5.5
SIZE4	182	275	285	192	181.5	Ø5.5
SIZE5	198	338	350	210	210	Ø5.5
SIZE6	240	395	410	260	248	Ø7
SIZE7	240	520	540	300	277	Ø9
SIZE8	270	560	580	340	314.5	Ø10
SIZE9	300	890	915	400	323.5	Ø10

SIZE10

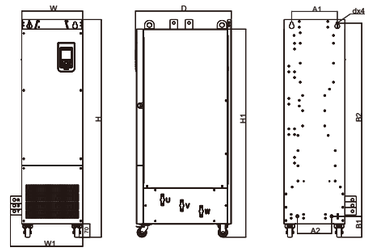

SIZE11

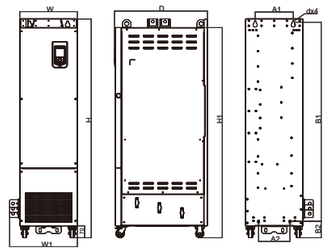

SIZE12

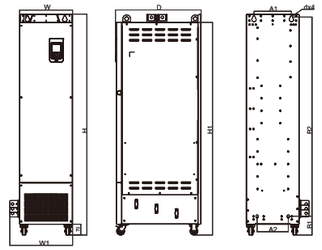

Appearance structure	Mounting hole (mm)				Outline dimensions (mm)					Installation hole diameter (mm)
	A1	A2	B1	B2	H	H1	W	W1	D	d×4
SIZE10	246.5	180	1016	110	1145	1094	320	380.5	505	Ø13
SIZE11	225	185	1175	98	1292	1241.5	340	400	550	Ø13
SIZE12	240	200	1276.5	121.5	1417	1364.5	340	403	550	Ø15.5

External operation keypad

（Unit：mm）



HLCD01NNNB500

LCD operation panel (optional accessory) supporting parameter copy and download. Users can conveniently modify parameters through the LCD panel. With Chinese display capability, the LCD panel offers more straightforward and convenient operation. As shown in the product image.



HLED00NNKB500

(With knob) LED operation panel (optional accessory) supporting parameter display and modification. Users can conveniently view and modify parameters through the LED panel. As shown in the product image.



HLED00NNNB500

(Knobless) LED operation panel (optional accessory) supporting parameter display and modification. Users can conveniently view and modify parameters through the LED panel. As shown in the product image.

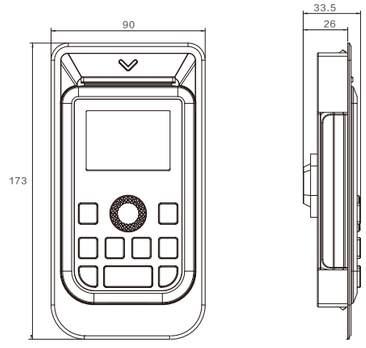

keyboard size

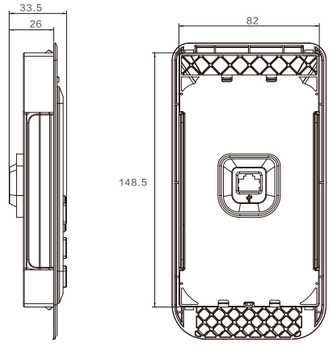

base dimensions

Control class extension options

Name		Model	Description
External operation keyboard	LCD external keyboard	HLCD01NNNB500	
	LED (without button) external keyboar	HLED00NNNB500	
	LED (with button) external keyboard	HLED00NNKB500	
Encoder expansion card		HEEPG1	ABZ differential input
		HEEPG1D	ABZ differential input, with frequency dividing output
		HEEPG2	ABZ/UVW differential input
		HEEPG3A	Open collector input (max. 100KHz)
		HEEPG3B	Open collector input (max. 200KHz)
		HEEPG4	Rotary encoder
		HEEPG4D	Rotary encoder, with frequency dividing output (5.5kW and higher model)
		HEEPG5	17-bit/23-bit Absolute Encoder Card
		HEEPG5D	17-bit/23-bit Absolute Encoder Card with frequency-divided output
		HEEPG6C	Compatible with differential/collector/push-pull inputs, with collector frequency division output
		HEEPG6D	Compatible with differential/collector/push-pull inputs, with differential frequency division output
Function expansion card	I/O expansion card	HEEIO1	4-way DI + 1-way AI + 1-way DO + 1-ray relay output + CAN+ RSRS485(Applicable to 15kW and higher model)
		HEEIO2	3-way DI
		HEEIO3	3-way DI + 1-way relay + RS485
		HEEIO4	3-way DI + 1-way DO + 1-way relay
		HEEIO5A	4-way DI + 2-way DO + RS485
		HEEIO5B	4-way DI + 2-way DO
		HEEIO6	1-way AI (support differential voltage input and temperature detection resistance input)
		HEEIO7	1-way AI(Supports -10V DV~10V DC input)
	CANopen communication card	HEECANOPEN	CANopen
	PROFIBUS communication card	HEEDP	PROFIBUS
	PROFINET communication card	HEEPN	PROFINET
	EtherCAT communication card	HEEECAT	EtherCAT
	4G communication card	HEE4G	LTE
	TCP communication card	HEETCP	MOBDUS-TCP Slave Protocol
	CAN communication card	HEECAN	CAN2.0B protocol
	RS485 communication card	HEE485	MODBUS-RTU slave station
Multi-function signal converter		HEEMFS	For connecting DHI.DriveSoft back-end software

Electrical wiring diagram

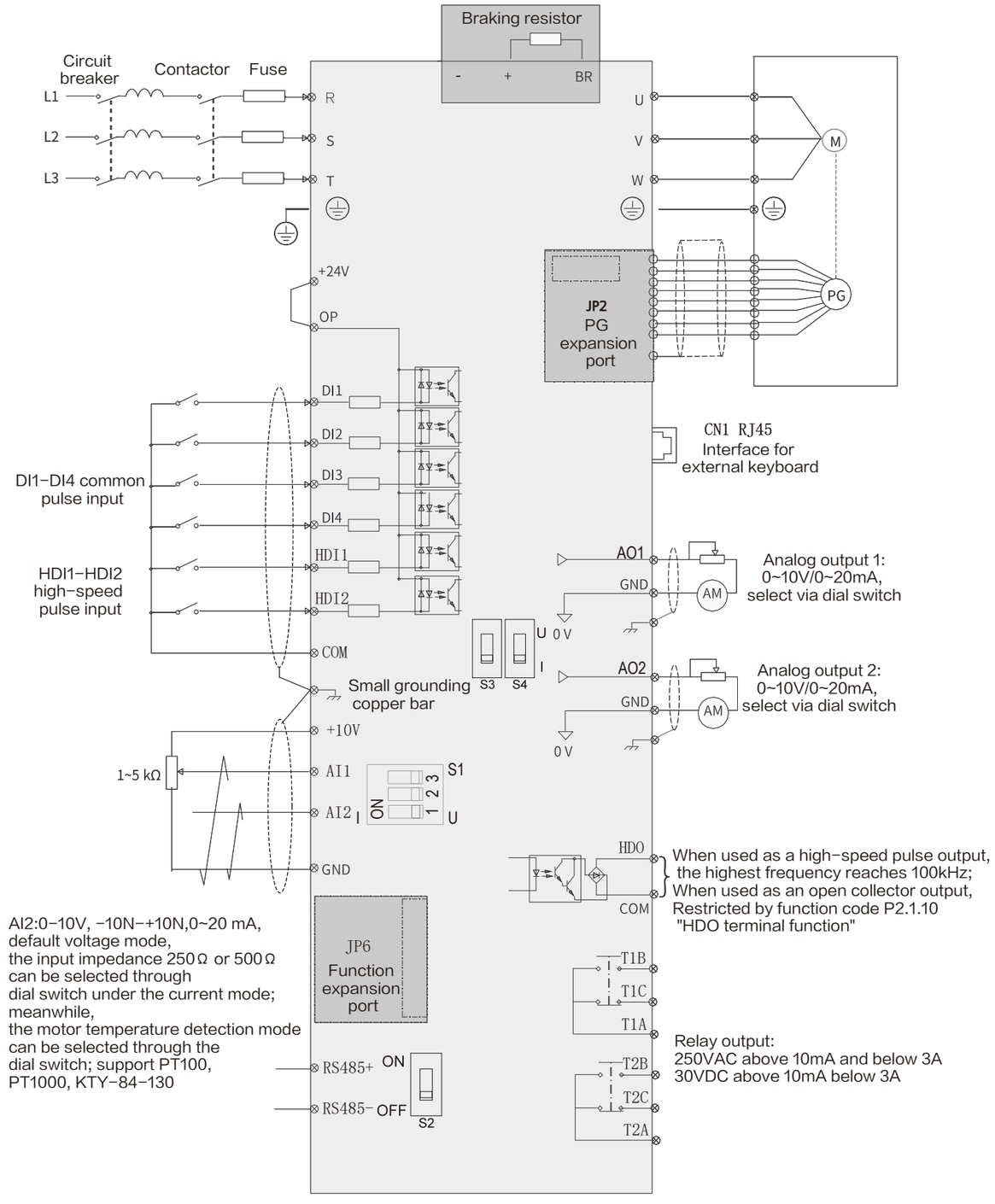

H300

(0.4kW ~ 630kW)

H300 is a high-performance general-purpose vector frequency inverter capable of controlling both asynchronous motors and PM synchronous motors.

It features bus communication functionality, background software monitoring, robust functionality, and stable performance. Suitable for applications in textile machinery, plastic machinery, packaging machinery, mining machinery, HVAC, machine tools, as well as various automated production equipment.





Supports Multiple Motor/Load Types

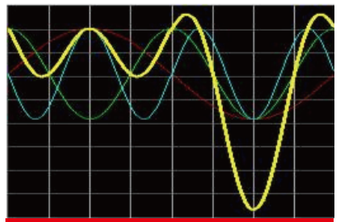

Wide Voltage Design



Multiple EMC Specifications and Solutions



Background Software Monitoring



Software Suppression Functions



Powerful Expansion Capabilities

Nameplates and Naming Rules

DELIXI
ELECTRIC

Reference: H300G18R5P22T4B
Input: AC 3PH 380V~480V 42/51A 50/60Hz
Output: AC 3PH 0V~480V 37/45A 0~599Hz 18.5/22kW
Hardware Version: 1.0.01 Software Version:1.01
SN : G18R5P22T4B25B000001

DELIXI HANGZHOU INVERTER CO.,LTD.



H300 G18R5P22 T4 B L D
① ② ③ ④ ⑤ ⑥

SN	Field	Description	
①	Product series Number	**H300 :** H300 series	
②	Product type and power	**G:** Heavy load **18R5:** It indicates the power of applicable motor is 18.5kW	
		P: Light load **22:** It indicates the power of applicable motor is 22kW	
③	Voltage grade	**T4:** 3-phase 380V~480VAC, 50/60Hz	
④	Braking unit	**Blank:** No	**B:** Built-in braking unit
⑤	Reactor	**Blank:** See the Description below*	**L:** Including DC reactor
⑥	Keyboard Configuration	**Blank:** HLED00NNKA300 (LED, Standard Version, With potentiometer)	**D:** No Keyboard
		E: HLED00NNNA300 (LED, without potentiometer)	**I:** HLCD01NNNA300 (LCD, English)
		For more keyboard configuration information, please refer to the instruction manual	

Note:

- 3-phase 380V~480V, reactor is not optional for SIZE1~SIZE9, DC reactor is configured for SIZE10 and above.
- 3-phase 380V~480V, braking unit is configured for SIZE1~SIZE4 and is optional for SIZE5~SIZE8.

Product Selection

Type	Appearance structure	Power range	Heavy load type				Light load type				BRAKE UNIT	DC reactor
			Power capacity (kVA)	Input current (A)	Output current (A)	Adapt motor (kW)	Power capacity (kVA)	Input current (A)	Output current (A)	Adapt motor (kW)		
Rated Voltage: Three-phase 380V~480VAC,50/60Hz												
H300G0R4P0R75T4B	SIZE1	0.4 ~ 3.0kW	2	2.2	1.6	0.4	2.8	4.4	3	0.75	standard configuration	/
H300G0R75P1R1T4B			2.8	4.4	3	0.75	4.1	5	3.5	1.1		
H300G1R1P1R5T4B			4.1	5	3.5	1.1	5	6	4.5	1.5		
H300G1R5P2R2T4B			5	6	4.5	1.5	6.7	6.8	6	2.2		
H300G2R2P3R0T4B			6.7	6.8	6	2.2	9.5	9	7.5	3		
H300G3R0P4R0T4B			9.5	9	7.5	3	12	11	9.5	4		
H300G4R0P5R5T4B	SIZE2	4.0~ 5.5kW	12	11	9.5	4	17.5	15.5	13	5.5		
H300G5R5P7R5T4B			17.5	15.5	13	5.5	22.8	20.5	17	7.5		
H300G7R5P11T4B	SIZE3	7.5~ 11kW	22.8	20.5	17	7.5	33.4	26	25	11		
H300G11P15T4B			33.4	26	25	11	42.8	35	32	15		
H300G15P18R5T4B	SIZE4	15kW	42.8	35	32	15	33	38.5	37	18		
H300G18R5P22T4(B)	SIZE5	18.5~ 22kW	33	38.5	37	18.5	39	46.5	45	22	optional	
H300G22P30T4(B)			39	46.5	45	22	52	62	60	30		
H300G30P37T4(B)	SIZE6	30~ 37kW	52	62	60	30	63	76	75	37		
H300G37P45T4(B)			63	76	75	37	79	92	90	45		
H300G45P55T4(B)	SIZE7	45~ 55kW	81	92	90	45	97	113	110	55		
H300G55P65T4(B)			97	113	110	55	110	134	130	65		
H300G65P75T4(B)	SIZE8	65~ 110kW	110	134	130	65	127	157	152	75		
H300G75P90T4(B)			127	157	152	75	150	180	176	90		
H300G90P110T4(B)			150	180	176	90	180	214	210	110		
H300G110P132T4(B)			180	214	210	110	220	256	253	132		
H300G132P160T4	SIZE9	132~ 160kW	220	256	253	132	263	305	300	160	/	standard configuration
H300G160P185T4			263	305	300	160	334	344	340	185		
H300G185P200T4L	SIZE10	185kW ~ 220kW	278	344	340	185	334	383	380	200		
H300G200P220T4L			334	383	380	200	375	425	420	220		
H300G220P250T4L			375	425	420	220	404	484	480	250		
H300G250P280T4L	SIZE11	250kW ~ 315kW	404	484	480	250	453	543	540	280		
H300G280P315T4L			453	543	540	280	517	605	600	315		
H300G315P355T4L			517	605	600	315	565	683	680	355		
H300G355P375T4L	SIZE12	355kW ~ 450kW	565	683	680	355	596	714	710	375		
H300G375P400T4L			596	714	710	375	629	753	750	400		
H300G400P450T4L			629	753	750	400	715.5	864	860	450		
H300G450P500T4L			715.5	864	860	450	766	964	930	500		

*Note: The parentheses in the model indicate optional accessories

Appearance and installation dimensions

(Unit: mm)

SIZE 1 ~ SIZE 6

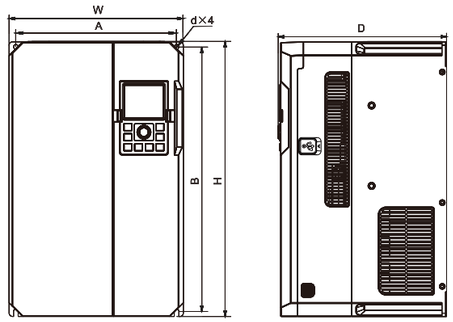

SIZE 7 ~ SIZE 9

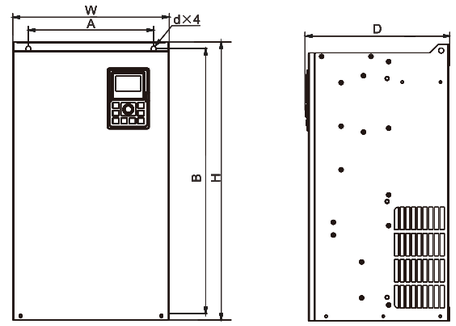

Appearance structure	Mounting hole (mm)		Outline dimensions (mm)			Installation hole diameter (mm)
	A	B	H	W	D	d×4
SIZE1	119	194	205	130	160	Ø5
SIZE2	119	194	205	130	170	Ø5
SIZE3	144	244	254	155	181.5	Ø5.5
SIZE4	182	275	285	192	181.5	Ø5.5
SIZE5	198	338	350	210	210	Ø5.5
SIZE6	240	395	410	260	248	Ø7
SIZE7	240	520	540	300	277	Ø9
SIZE8	270	560	580	340	314.5	Ø10
SIZE9	300	890	915	400	323.5	Ø10

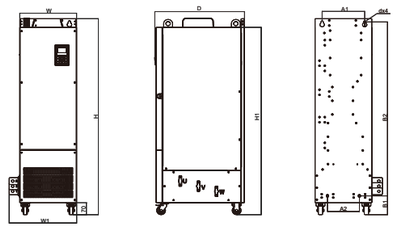

SIZE 10

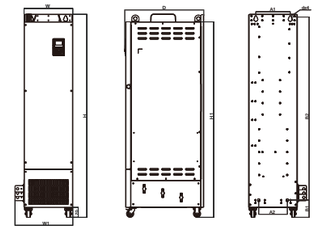

SIZE 12

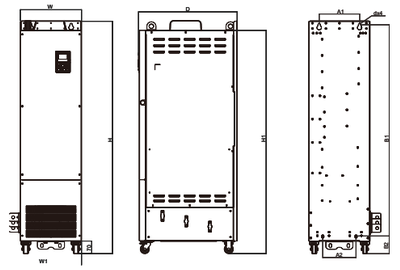

SIZE 11

Appearance structure	Mounting hole (mm)				Outline dimensions (mm)					Installation hole diameter (mm)
	A1	A2	B1	B2	H	H1	W	W1	D	d×4
SIZE10	246.5	180	1016	110	1145	1094	320	380.5	505	Ø13
SIZE11	225	185	1175	98	1292	1241.5	340	400	550	Ø13
SIZE12	240	200	1276.5	121.5	1417	1364.5	340	403	550	Ø15.5

External operation keypad

(Unit: mm)

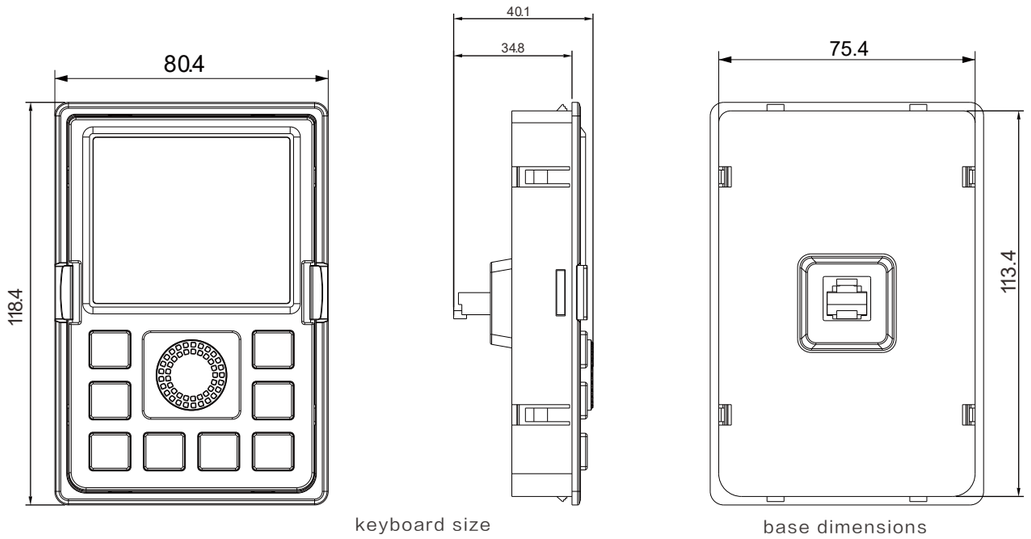

Control class extension options

Name		Model	Description
Function expansion card	I/O expansion card	HEEIO1	4-way DI + 1-way AI + 1-way DO + 1-ray relay output + CAN+ RSRS485(Applicable to 15kW and higher model)
		HEEIO2	3-way DI
		HEEIO3	3-way DI + 1-way relay + RS485
		HEEIO4	3-way DI + 1-way DO + 1-way relay
		HEEIO5A	4-way DI + 2-way DO + RS485
		HEEIO5B	4-way DI + 2-way DO
		HEEIO6	1-way AI (support differential voltage input and temperature detection resistance input)
		HEEIO7	1-way AI(Supports -10V DV~10V DC input)
		HFEIO1	1-way DI + 1-way DO + 1-way relay
	CANopen communication card	HEECANOPEN	CANopen
	PROFIBUS communication card	HEEDP	PROFIBUS
	PROFINET communication card	HEEPN	PROFINET
	EtherCAT communication card	HEEECAT	EtherCAT
	4G communication card	HEE4G	LTE
	TCP communication card	HEETCP	MOBDUS-TCP Slave Protocol
	CAN communication card	HEECAN	CAN2.0B protocol
	RS485 communication card	HEE485	MODBUS-RTU slave station
Multi-function signal converter		HEEMFS	For connecting DHI.DriveSoft back-end software

Distribution of Control Circuit Termina

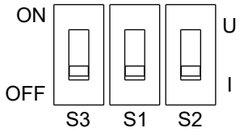

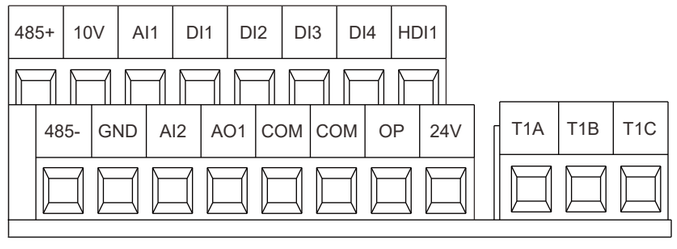

Electrical wiring diagram

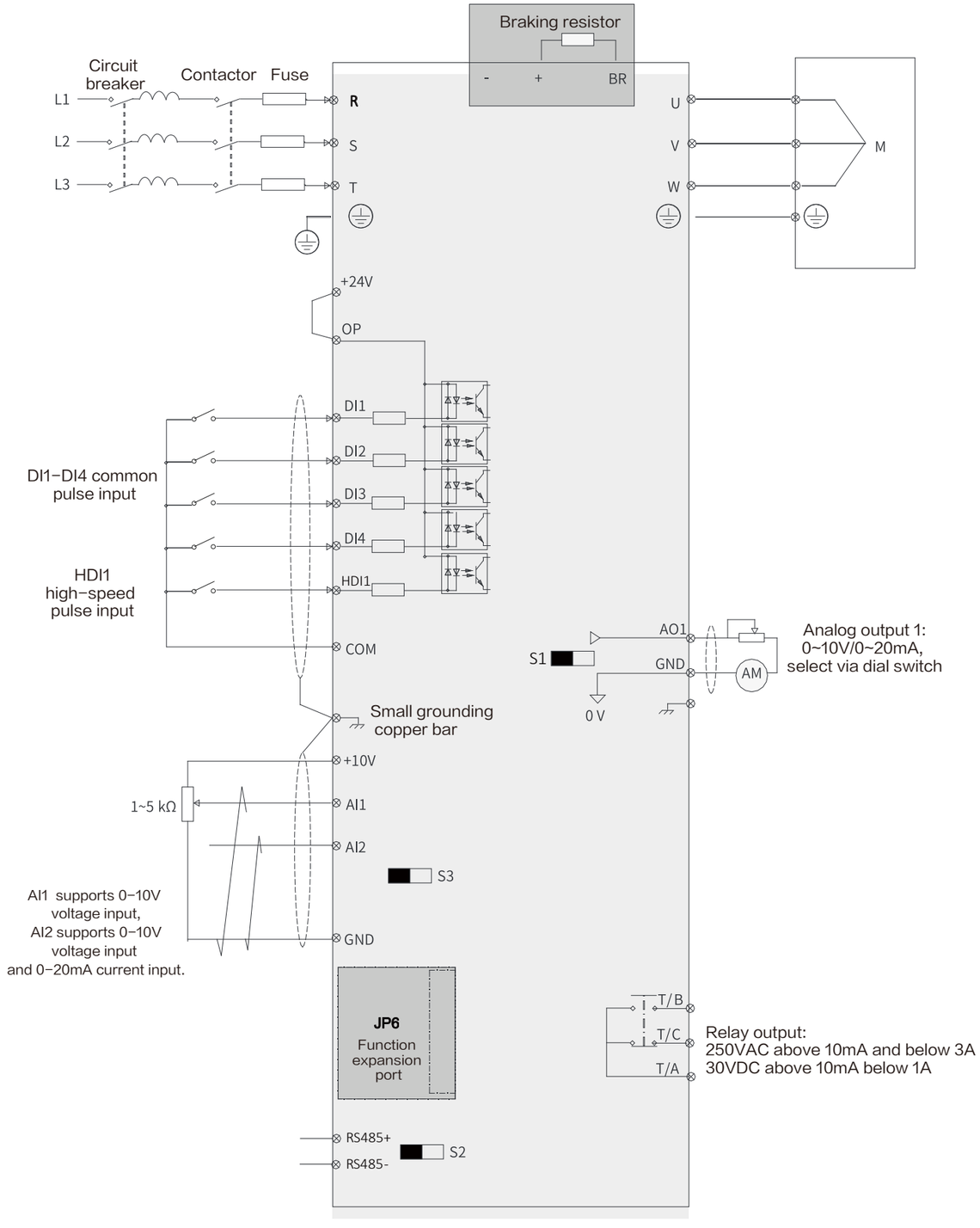

H80

（0.4kW ~ 5.5kW）



The H80 series is a compact, book shaped vector frequency converter that can control asynchronous motors and permanent magnet synchronous motors without encoders. It comes standard with dual network ports, powerful functions, and stable performance. It is suitable for the motor drive needs of various small automated production equipment in industries such as food, packaging, woodworking, logistics, fans, and water pumps.

Accurate control



- Optimized control algorithm, supporting V/F control mode and open-loop vector control mode (SVC), improving speed accuracy and energy efficiency
- Support asynchronous induction motor (IM) and permanent magnet synchronous motor (PMSM) drive

Compact structure



- Book shaped narrow body structure design, compact model, greatly saves installation space
- Support parallel installation, rail installation, and keyboard external expansion, able to adapt to different industrial control environments

Stable operation

- 100% circuit board coating enhances resistance to moisture, corrosion, and dust environments
- software suppression function reduces harmonics and electromagnetic interference, ensuring stable device operation
- Built in braking unit,Overload capacity of 150% rated current for 60 seconds

Convenient communication

- Dual network ports, standard RS485 communication, can efficiently network, improve system reliability and flexibility



Side by side installation



rail mounting



Modbus-RTU



Nameplates and Naming Rules



◎Nameplate data: Taking model H80G5R5T4B as an example

DELIXI ELECTRIC

Reference: H80G5R5T4B

Input: AC 3PH 380V~480V 15.5A 50/60Hz

Output: AC 3PH 0V~480V 13A 0~599Hz 5.5kW

Hardware Version: 1.0.01 Software Version:1.01

SN：G5R5T4B25H000001

DELIXI HANGZHOU INVERTER CO.,LTD.

H80 G 5R5 T4 B

① ② ③ ④ ⑤

SN	Field	Description	
①	Product series Number	**H80**：H80 series	
②	load type	**G:** Universal	
③	Adapt motor power	**0R4**：0.4kW **0R75**：7.5kW **1R1**：1.1kW **1R5**：1.5kW	
		2R2：2.2kW **3R0**：3.0kW **4R0**：4.0kW **5R5**：5.5kW	
④	Voltage phase number	**S2**：single-phase 200~240VAC，50/60Hz	**T4**：three-phase 380V~480VAC，50/60Hz
⑤	Braking unit	**Null:** No	**B**：Built-in braking unit

Product Selection

Type	Appearance structure	Power range	Power capacity (kVA)	Input current (A)	Output current (A)	Adapt motor (kW)	Braking unit
Three phase 380~480V，50/60Hz							
H80G0R4T4B	SIZEA	0.4~2.2kW	2.0	2.2	1.6	0.4	standard configuration
H80G0R75T4B			2.8	4.4	3.0	0.75	
H80G1R1T4B			4.1	5.0	3.5	1.1	
H80G1R5T4B			5.0	6.0	4.5	1.5	
H80G2R2T4B			6.7	7.5	5.5	2.2	
H80G3R0T4B	SIZEB	3.0~5.5kW	9.5	9.5	7.2	3.0	
H80G4R0T4B			12.0	11.0	9.5	4.0	
H80G5R5T4B			17.5	15.5	13.0	5.5	

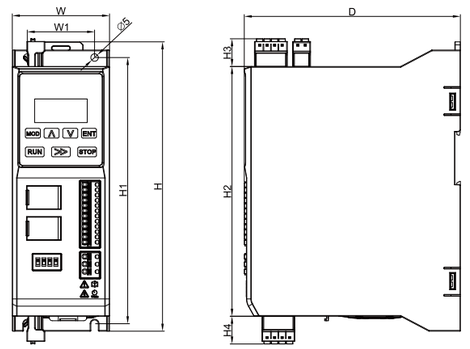

Overall dimensions

Appearance structure	Mounting hole (mm)		Outline dimensions (mm)			Installation hole diameter (mm)
	A	B	H	W	D	d×4
SIZEA	45	178	193.5	65	144.5	Ø5
SIZEB	45	196	211.5	65	157	Ø5

Distribution of control circuit terminals

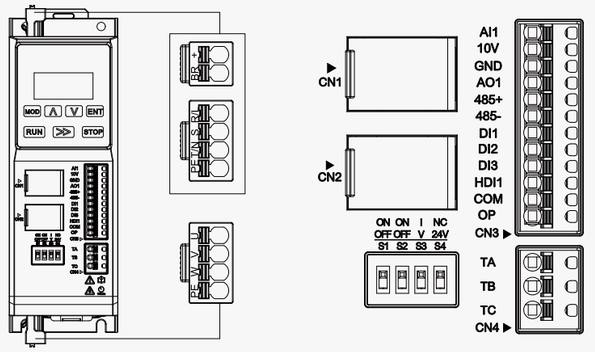

Terminal marking	Terminal name	Functional Description
R、S、T	Three phase power input terminal	AC input three-phase power connection point
(+)、BR	Braking resistor connection terminal	Connect external braking resistor
U、V、W	Output terminal	Connect three-phase motors
PE	Grounding terminal (PE)	Protective grounding

Electrical wiring diagram

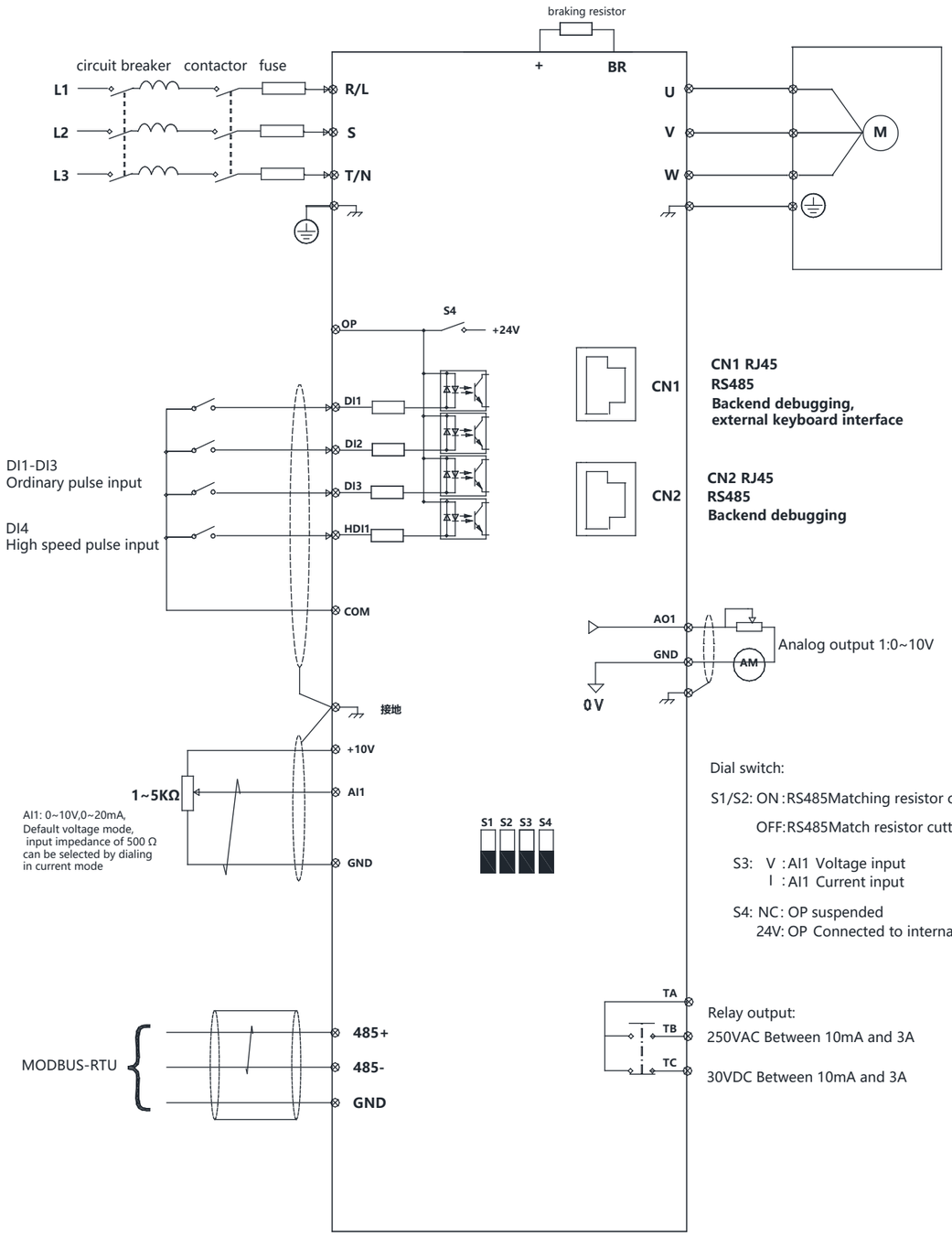

H Series（H500/H300/H80）Technical specifications

Item				Specification
Control performance	H series	Type of drivable motors		Asynchronous Induction Motor (IM), Permanent Magnet Synchronous Motor (PMSM)
	H500	Control mode		Open-Loop Vector Control (SVC), Closed-Loop Vector Control (FVC), V/F Control
	H300/H80			Open-Loop Vector Control (SVC), V/F Control
	H series	Overload Capacity		Heavy Duty Load: 150% rated current for 60s; Light Load: 120% rated current for 60s
	H series	Asynchronous Motor VF	Supported functions	Overvoltage suppression, overcurrent suppression, momentary power loss ride-through, oscillation suppression, torque boost, slip compensation, multiple V/F curve selections, V/F separation, DC braking, random PWM, over-excitation quick deceleration, droop control, parameter auto-tuning, speed tracking, etc.
	H500	Asynchronous Motor FVC	Supported Functions	Master-Slave Control, Overvoltage Suppression, Torque Control, Momentary Power Loss Ride-Through, Parameter Auto-Tuning, etc.
			Supports encoders	Communication encoder, ABZ encoder (differential, collector, push-pull), and resolver encoder
			Starting torque	0Hz/180% (FVC)
			Torque Step Response	Torque step response within 2 ms
			Speed regulation accuracy	0.02%
			Speed fluctuation	0.05%
			Torque Control Accuracy	Torque control accuracy: ±2%
			Field weakening ratio	5x flux-weakening
	H series	Asynchronous Motor SVC	Supported Functions	Master-Slave Control, Overvoltage Suppression, DC Braking, Torque Control, Momentary Power Loss Ride-Through, Parameter Auto-Tuning, Speed Tracking, etc.
			Speed Regulation Range	1:250 (SVC)
			Starting torque	0.25Hz/150% (SVC)
			Torque Step Response	Torque step response within 2 ms
			Torque Control Accuracy	Torque control accuracy ±3% above 5Hz
			Speed regulation accuracy	Within 10% of rated slip
			Field weakening ratio	5x flux-weakening
	H500	Synchronous Motor FVC	Supported Functions	Master-Slave Control, Overvoltage Suppression, Torque Control, Momentary Power Loss Ride-Through, Parameter Auto-Tuning, etc.
			Supports encoders	Communication encoder, ABZ encoder (differential, collector, push-pull), resolver encoder
			Starting torque	0Hz/180% (FVC)
			Torque Step Response	Torque step response within 2 ms
			Speed regulation accuracy	0.02% (motor and encoder must be defect-free)
			Speed fluctuation	0.05% (motor and encoder must be defect-free)
			Torque Control Accuracy	Torque control accuracy: ±2%
	H series	Synchronous Motor SVC	Supported Functions	Master-Slave Control, Overvoltage Suppression, DC Braking, Torque Control, Momentary Power Loss Ride-Through, Parameter Auto-Tuning, Speed Tracking, etc.
			Speed Regulation Range	1:100 (SVC)
			Starting torque	0.5Hz/150% (SVC)
			Torque Step Response	Torque step response within 2 ms
			Torque Control Accuracy	Torque control accuracy ±3% above 5Hz
			Speed regulation accuracy	0.05%

H Series（H500/H300/H80）Technical specifications

Item				Specification
Basic functions	H series	Command channel		Controls motor start/stop operations, including DI/DO, virtual DI/DO, and external expansion card DI/DO. Supports switching between 4 sets of motor parameters/control parameters, and allows free programming for configuring start/stop commands.
		Given channel	Input frequency resolution	Digital setting: 0.01 Hz ，Analog setting: Maximum frequency × 0.1%
	H500	Given channel	Given velocity/torque	Acceleration and deceleration curves, dynamic switching between multiple acceleration/deceleration times, S-curve acceleration/deceleration, external PID reference, AI (2 channels supporting 0-10V and 0-20mA), communication-based speed/torque reference, pulse reference (HDI1, HDI2), multi-step value reference, and free programming capability for custom speed/torque reference configurations
		Communication mode		Support 7 communication modes:Modbus（Modbus-RTU、Modbus-TCP）、Profibus-DP、CAN、CANopen、Profinet、EtherCAT、4G-LTE
	H300	Given channel	Given velocity/torque	Acceleration and deceleration curves, dynamic switching between multiple acceleration/deceleration times, S-curve acceleration/deceleration, external PID reference, AI (2 channels supporting 0-10V and 0-20mA), communication-based speed/torque reference, pulse reference (HDI1, HDI2), multi-step value reference, and free programming capability for custom speed/torque reference configurations
		Communication mode		Support 7 communication modes:Modbus（Modbus-RTU、Modbus-TCP）、Profibus-DP、CAN、CANopen、Profinet、EtherCAT、4G-LTE
	H80	Given channel	Given velocity/torque	Acceleration/deceleration curve, dynamic switching between multiple groups of acceleration/deceleration time, acceleration/deceleration S curve, given external PID, AI (1 way, support ±10V, 0~20mA), given communication speed and torque, given pulse (HDI1), given multi-segment value, etc., support free programming and velocity setting/given torque
		Communication mode		Modbus（Modbus-RTU）
	H series	Output limitation		Support torque limitation, power limitation, current limitation, limit torque limitation, velocity limitation and frequency hopping
		Process control	PID	Free configuration of sleep, given and feedback source, switching of 2-segment PID parameters, feedback loss detection, free configuration of output limitation, free initialization configuration
		Protection		Inverter motor protection, including overvoltage, overcurrent, overload, motor overheat,load drop protection,fault auto reset, auto reboot,etc.,
Personalized function	H series	Free programming		Realize free programming. logic operations (AND/OR/NOT, XOR/XNOR),arithmetic operations (addition/subtraction/multiplication/division, absolute value, numerical comparison), logic delay on/off, multi-point curve, constant value
		Self-detection		nverter and motor detection. Support detection of IGBT straight connection, short circuit to ground, phase loss self-detection, encoder self-detection, inter-phase short circuit self-detection
		background software		Background software Dlx.DriveStudio supports parameter upload/download and oscilloscope function of inverter. Support remote debugging and fault diagnosis through background software. Monitor internal status of the Product through oscilloscope
Running	H series	Running instruction		Given by operation panel, given by control terminal, given by serial communication port (switched through different modes).
		Frequency instruction		14 frequency instructions: Given by figure, given by analog voltage, given by analog current, given by pulse, given by serial port (switched through different modes)
		Auxiliary frequency instruction		14 auxiliary frequency instructions. Flexibly realize fine tuning and synthesis of auxiliary frequency.
	H500	Input terminal		Standard:4 DI terminals, 2 HDI terminals 2 AI terminals. AI1/AI2 support 0V–10V voltage mode input and 0–20mA current mode input. Additionally, AI2 supports temperature mode input (function switchable via DIP switch).
		Output terminal		Standard:2 AO terminals, support 0~20mA current output or 0~10V voltage output 2 relay output terminals 1 HDO (can be selected as high-speed pulse output or common DO function)
	H300	Input terminal		Standard: 4 DI terminals, 1 high-speed DI terminal 2 AI terminals; AI1 supports only 0V~10V voltage mode input, AI2 supports 0V~10V voltage mode input or 0~20mA current mode input
		Output terminal		Standard:1 AO terminal, supporting 0~20mA current output or 0~10V voltage output 1 relay output terminal
	H80	Input terminal		Standard:3 DI terminals, 1 HDI terminals 1 AI terminals, AI1 supports 10V~10V voltage mode input, 0~20mA current mode input
		Output terminal		Standard:1 AO terminals, support 0~10V voltage output 1 relay output terminals

H Series（H500/H300/H80）Technical specifications

Item			Specification
Display and keyboard Operation	H series	LED Control Panel Display	Displays and allows modification of parameters, while showing operational statuses of the Variable Frequency Drive (Forward/Reverse/Stop, Panel/Terminal/Communication Control, Speed/Torque Control, etc.)
		LCD and LED External Control Panel Displays	Optional accessories with Chinese/English/Russian language prompts for operational guidance (LCD only), and parameter modification capabilities
		Parameter Copy	Facilitates rapid parameter upload and download through either the onboard LCD control panel or an external control panel accessory
		Key Lock and Function Selection	Enables partial key locking and defines functional boundaries for specific keys to prevent accidental operations
Environment	H series	Application scenario	Indoor, free from direct sunlight, dust, corrosive gas, flammable gas, oil mist, water vapor, dropping water or salt, etc.
		Altitude	No derating below altitude of 1,000m; derated by 1% when height increases by 100m above the altitude of 1,000m; the max. service altitude is 3,000m. Please contact the manufacturer when altitude exceeds 3,000m
		Ambient temperature	-20°C ~ +50°C, have derated use when the ambient temperature is 40~50°C; derated by 1.5% when the ambient temperature increases by 1°C.
		Humidity	Below 95%RH, no condensation.
		Vibration	Less than 5.9 m/s² (0.6g)
		Storage temperature	- 40℃~ + 70℃



E Series VFD

CDI-E180 series General VFD
CDI-E100 series Standard VFD
CDI-E102 series Economic VFD
CDI-EM60 series Mini VFD



Naming Rules

CDI – E180G011P015 T4 B L
① ② ③ ④ ⑤ ⑥ ⑦

SN	Field	Description	
①	Frequency inverter	**CDI:** Delixi electric inverter	
②	Product Series No.	**E180:** E180 Series **E102**: E102 Series **E100**: E100 Series **EM60:** EM60 Series	
③	Product Type	**G:** General type	**P:** Light load type
④	Adapt motor power	**1R5:**1.5kW **011:** 11kW **110:**110kW	
⑤	Voltage Level (Rated Voltage)	**S2:** One-phase 220V, 50/60Hz	**T2:** Three-phase 220V, 50/60Hz
		T4: Three-phase 380V, 50/60Hz	**T6:** Three-phase 690V, 50/60Hz
⑥	Brake Unit	**Blank:** No Built-in Brake Unit	**B:** Built-in Brake Unit
⑦	Reactor	**Blank:** No Built-in DC Reactor	**L:** Built-in DC Reactor

E180 (0.4kW ~ 700kW)

The CDI-E180 series inverters offer optimized open-loop vector control, V/F control, and closed-loop vector control, featuring stable performance and enhanced functionality. As high-performance vector inverters, they are widely applicable in scenarios requiring precise speed control, fast torque response, and high low-frequency output torque.

Application Fields: Power, textiles and chemical fibers, building materials, petroleum, chemicals, metallurgy, municipal engineering, papermaking, food and beverages, tobacco, etc.



Product Selection

Type	Rated capacity (kVA)	Rated input current (A)	Rated output current (A)	Matchable Motor (kW)	Brake unit	D.C. reactor
T2 (Three-phase 220V, 50/60Hz)						
CDI-E180G0R4T2B	1.5	3.4	2.3	0.4	Built-in as standard configuration	/
CDI-E180G0R75T2B	3	5	4	0.75		
CDI-E180G1R5T2B	4	5.8	7	1.5		
CDI-E180G2R2T2B	5.9	10.5	10	2.2		
CDI-E180G3R7T2B	8.5	15.5	17	3.7		
CDI-E180G5R5T2B	17	26	25	5.5		
CDI-E180G7R5T2BL	21	35	32	7.5		Built-in as standard configuration
CDI-E180G011T2	30	46.5	45	11	Built-in as option configuration	Built-in as option configuration
CDI-E180G015T2	40	62	60	15		
CDI-E180G018.5T2	50	76	75	18.5	External connection as option configuration	External connection as option configuration
CDI-E180G022T2	60	92	90	22		
CDI-E180G030T2	72	113	110	30		
CDI-E180G037T2	100	157	152	37		
CDI-E180G045T2	116	180	176	45		
CDI-E180G055T2	138	214	210	55		
CDI-E180G075T2	200	305	300	75		
CDI-E180G093T2	224	344	340	93		
T4 (Three-phase 380V, 50/60Hz)						
CDI-E180G0R75T4B	1.5	3.4	2.3	0.75	Built-in as standard configuration	/
CDI-E180G1R5T4B	3	5	3.7	1.5		
CDI-E180G2R2T4B	4	5.8	5.1	2.2		
CDI-E180G3R7/P5R5T4B	5.9/8.5	10.5/15.5	9.0/13	3.7/5.5		
CDI-E180G5R5MT4B	8.5	15.5	13	5.5		
CDI-E180G5R5/P7R5T4B	8.5/11	15.5/20.5	13/17	5.5/7.5		
CDI-E180G7R5/P011T4B	11/17	20.5/26	17/25	7.5/11		
CDI-E180G011MT4B	17	26	25	11		
CDI-E180G011/P015T4BL	17/21	26/35	25/32	11/15		Built-in as standard configuration
CDI-E180G015/P018.5T4BL	21/24	35/38.5	32/37	15/18.5		

Product Selection

Type	Rated capacity (kVA)	Rated input current (A)	Rated output current (A)	Matchable Motor (kW)	Brake unit	D.C. reactor
T4 (Three-phase 380V, 50/60Hz)						
CDI-E180G018.5/P022T4	24/30	38.5/46.5	37/45	18.5/22	Built-in as option configuration	Built-in as option configuration
CDI-E180G022/P030T4	30/40	46.5/62	45/60	22/30		
CDI-E180G030/P037T4	40/50	62/76	60/75	30/37		
CDI-E180G037/P045T4	50/60	76/92	75/90	37/45	External connection as option configuration	
CDI-E180G045/P055T4	60/72	92/113	90/110	45/55		
CDI-E180G055/P075T4	72/100	113/157	110/152	55/75		
CDI-E180G075/P093T4	100/116	157/180	152/176	75/93		External connection as option configuration
CDI-E180G093/P110T4	116/138	180/214	176/210	93/110		
CDI-E180G110/P132T4	138/167	214/256	210/253	110/132		
CDI-E180G132/P160T4	167/200	256/305	253/300	132/160		
CDI-E180G160/P185T4	200/224	305/344	300/340	160/185		
CDI-E180G185/P200T4	224/250	344/383	340/380	182/200		
CDI-E180G200/P220T4L	250/276	383/425	380/420	200/220	External connection as option configuration	Built-in as standard configuration
CDI-E180G220T4L	276	425	420	220		
CDI-E180P250T4L	316	484	480	250		
CDI-E180G250/P280T4L	316/355	484/543	480/540	250/280		
CDI-E180G280/P315T4L	355/395	543/605	540/600	280/315		
CDI-E180G315/P355T4L	395/467	605/714	600/680	315/355		
CDI-E180G355/P375T4L	447/467	683/714	680/710	355/375		
CDI-E180G375T4L	467	714	710	375		
CDI-E180P400T4L	494	753	750	400		
CDI-E180G400T4L	494	753	750	400		
CDI-E180P500T4L	612	934	930	500		
CDI-E180G500T4L	612	934	930	500		
CDI-E180G630T4L	790	1206	1200	630		
T6 (Three-phase 690V, 50/60Hz)						
CDI-E180G022/P030T6	36/48	30/40	28/38	22/30	External connection as option configuration	External connection as option configuration
CDI-E180G030/P037T6	48/59	40/49	38/46	30/37		
CDI-E180G037/P045T6	59/70	49/59	46/56	37/45		
CDI-E180G045/P055T6	70/86	59/72	56/68	45/55		
CDI-E180G055/P075T6	86/116	72/97	68/92	55/75		
CDI-E180G075/P093T6	116/139	97/116	92/110	75/93		
CDI-E180G093/P110T6	139/166	116/139	110/132	93/110		
CDI-E180G110/P132T6	166/195	139/163	132/155	110/132		
CDI-E180G132/P160T6L	195/227	163/190	155/180	132/160		Built-in as standard configuration
CDI-E180G160/P185T6L	227/264	190/221	180/210	160/185		
CDI-E180G185/P220T6L	264/308	221/258	210/245	185/220		
CDI-E180G220/P250T6L	308/347	258/290	245/275	220/250		
CDI-E180G250/P280T6L	347/383	290/321	275/305	250/280		
CDI-E180G280/P315T6L	383/435	321/364	305/345	280/315		
CDI-E180G315/P355T6L	435/491	364/411	345/390	315/355		
CDI-E180G355/P400T6L	491/541	411/453	390/430	355/400		

Product Selection

Type	Rated capacity (kVA)	Rated input current (A)	Rated output current (A)	Matchable Motor (kW)	Brake unit	D.C. reactor
CDI-E180G400T6L	541	453	430	400	External connection as option configuration	Built-in as standard configuration
CDI-E180P500T6L	680	569	540	500		
CDI-E180G500T6L	680	569	540	500		
CDI-E180P600T6L	793	664	630	600		
CDI-E180G600T6L	664	664	630	600		
CDI-E180P700T6L	905	758	720	700		
CDI-E180G700T6L	905	758	720	700		

Appearance and installation dimensions

(Unit: mm)

Model 1

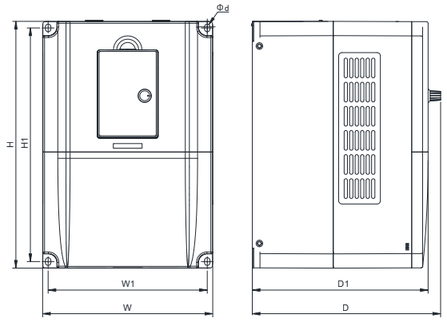

Model 2 ~ Model 5

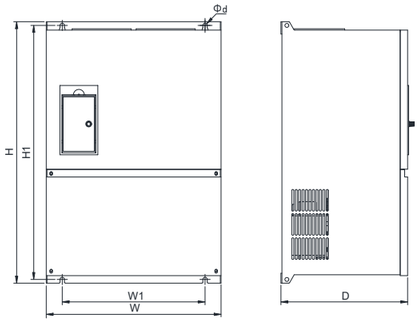

Model 6 ~ Model 7

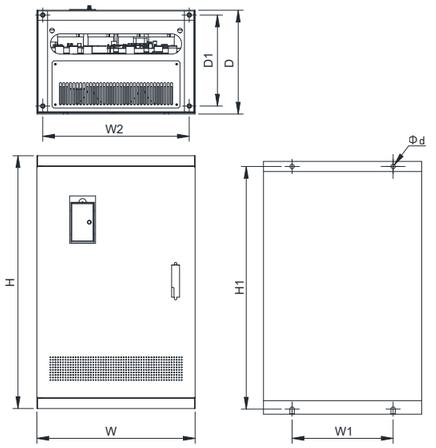

Model 8 ~ Model 10

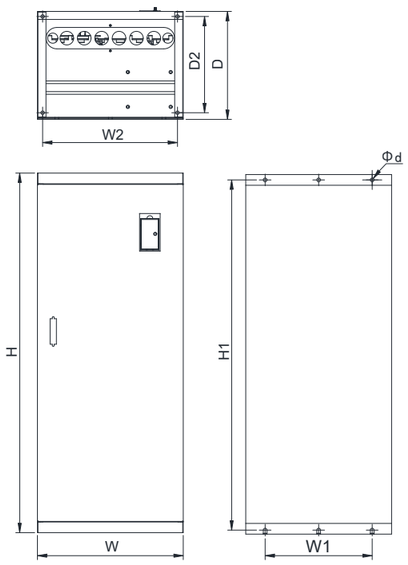

Appearance and installation dimensions

（Unit：mm）

Model 11

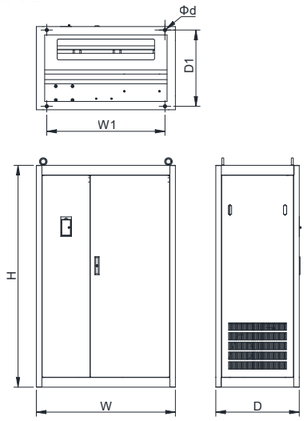

Inverter model	Overall installation dimensions(mm)								Dimension diagram
	W	W1	W2	H	H1	D	D1	Φd	
CDI-E180G0R4T2B	130	120	-	180	170	159.5	148	5	E180 Model 1
CDI-E180G0R75T2B	130	120	-	180	170	159.5	148	5	E180 Model 1
CDI-E180G1R5T2B	155	145	-	225	215	171.5	160	5	E180 Model 1
CDI-E180G2R2T2B	155	145	-	225	215	171.5	160	5	E180 Model 1
CDI-E180G3R7T2B	200	188	-	300	288	183.5	172	6	E180 Model 1
CDI-E180G5R5T2B	250	180	-	420	405	202	189	7	E180 Model 2
CDI-E180G7R5T2BL	250	180	-	420	405	202	189	7	E180 Model 2
CDI-E180G011T2	300	190	-	460	445	222	209	7	E180 Model 2
CDI-E180G015T2	300	190	-	460	445	222	209	7	E180 Model 2
CDI-E180G018.5T2	355	290	-	530	515	270	257	9	E180 Model 3
CDI-E180G022T2	355	290	-	530	515	270	257	9	E180 Model 3
CDI-E180G030T2	390	290	-	600	585	270	257	9	E180 Model 4
CDI-E180G037T2	390	290	-	600	585	270	257	9	E180 Model 4
CDI-E180G045T2	470	300	435	750	720	321	308	13	E180 Model 6
CDI-E180G055T2	470	300	435	750	720	321	308	13	E180 Model 6
CDI-E180G075T2	530	350	495	950	920	391	378	13	E180 Model 7
CDI-E180G093T2	530	350	495	950	920	391	378	13	E180 Model 7
CDI-E180G0R75T4B	130	120	-	180	170	159.5	148	5	E180 Model 1
CDI-E180G1R5T4B	130	120	-	180	170	159.5	148	5	E180 Model 1
CDI-E180G2R2T4B	130	120	-	180	170	159.5	148	5	E180 Model 1
CDI-E180G3R7/P5R5T4B	155	145	-	225	215	171.5	160	5	E180 Model 1
CDI-E180G5R5MT4B	155	145	-	225	215	171.5	160	5	E180 Model 1
CDI-E180G5R5/P7R5T4B	200	180	-	300	288	183.5	172	6	E180 Model 1
CDI-E180G7R5/P011T4B	200	180	-	300	288	183.5	172	6	E180 Model 1
CDI-E180G011MT4B	200	180	-	300	288	183.5	172	6	E180 Model 1
CDI-E180G011/P015T4BL	250	180	-	420	405	202	189	7	E180 Model 2
CDI-E180G015/P018.5T4BL	250	180	-	420	405	202	189	7	E180 Model 2
CDI-E180G018.5/P022T4	300	190	-	460	445	222	209	7	E180 Model 2
CDI-E180G022/P030T4	300	190	-	460	445	222	209	7	E180 Model 2
CDI-E180G030/P037T4	300	190	-	460	445	222	209	7	E180 Model 2

Appearance and installation dimensions

（Unit：mm）

Inverter model	Overall installation dimensions(mm)								Dimension diagram
	W	W1	W2	H	H1	D	D1	Φd	
CDI-E180G037/P045T4	355	290	-	530	515	270	257	9	E180 Model 3
CDI-E180G045/P055T4	355	290	-	530	515	270	257	9	E180 Model 3
CDI-E180G055/P075T4	390	290	-	600	585	270	257	9	E180 Model 4
CDI-E180G075/P093T4	390	290	-	600	585	270	257	9	E180 Model 4
CDI-E180G093/P110T4	470	300	435	750	720	321	308	13	E180 Model 6
CDI-E180G110/P132T4	470	300	435	750	720	321	308	13	E180 Model 6
CDI-E180G132/P160T4	530	350	495	950	920	391	378	13	E180 Model 7
CDI-E180G160/P185T4	530	350	495	950	920	391	378	13	E180 Model 7
CDI-E180G185/P200T4	530	350	495	950	920	391	378	13	E180 Model 7
CDI-E180G200/P220T4L	620	450	580	1250	1210	437	424	15	E180 Model 8
CDI-E180G220T4L	620	450	580	1250	1210	437	424	15	E180 Model 8
CDI-E180P250T4L	620	450	580	1250	1210	437	424	15	E180 Model 8
CDI-E180G250/P280T4L	700	500	660	1400	1360	437	424	15	E180 Model 9
CDI-E180G280/P315T4L	700	500	660	1400	1360	437	424	15	E180 Model 9
CDI-E180G315/P355T4L	700	500	660	1400	1360	437	424	15	E180 Model 9
CDI-E180G355/P375T4L	1000	850		1800	-	600	500	16	E180 Model 11
CDI-E180G375T4L	1000	850		1800	-	600	500	16	E180 Model 11
CDI-E180P400T4L	1000	850		1800	-	600	500	16	E180 Model 11
CDI-E180G400T4L	1000	850		1800	-	600	500	16	E180 Model 11
CDI-E180P500T4L	1000	850		1800	-	600	500	16	E180 Model 11
CDI-E180G500T4L	1000	850		1800	-	600	500	16	E180 Model 11
CDI-E180G630T4L	1000	850		1800	-	600	500	16	E180 Model 11
CDI-E180G022/P030T6	350	220	-	540	525	310	297	7	E180 Model 5
CDI-E180G030/P037T6	350	220	-	540	525	310	297	7	E180 Model 5
CDI-E180G037/P045T6	400	300	-	720	690	325	312	12	E180 Model 5
CDI-E180G045/P055T6	400	300	-	720	690	325	312	12	E180 Model 5
CDI-E180G055/P075T6	400	300	-	720	690	325	312	12	E180 Model 5
CDI-E180G075/P093T6	540	420	505	1000	970	376	363	14	E180 Model 7
CDI-E180G093/P110T6	540	420	505	1000	970	376	363	14	E180 Model 7
CDI-E180G110/P132T6	540	420	505	1000	970	376	363	14	E180 Model 7
CDI-E180G132/P160T6L	540	420	496	1170	1130	417	404	13	E180 Model 10
CDI-E180G160/P185T6L	540	420	496	1170	1130	417	404	13	E180 Model 10
CDI-E180G185/P220T6L	540	420	496	1170	1130	417	404	13	E180 Model 10
CDI-E180G220/P250T6L	540	420	496	1170	1130	417	404	13	E180 Model 10
CDI-E180G250/P280T6L	540	420	496	1170	1130	417	404	13	E180 Model 10
CDI-E180G280/P315T6L	800	700		1800		600	500	16	E180 Model 11
CDI-E180G315/P355T6L	800	700		1800		600	500	16	E180 Model 11
CDI-E180G355/P400T6L	800	700		1800		600	500	16	E180 Model 11
CDI-E180G400T6L	1000	850		1800		600	550	16	E180 Model 11
CDI-E180P500T6L	1000	850		1800		600	550	16	E180 Model 11
CDI-E180G500T6L	1000	850		1800		600	550	16	E180 Model 11
CDI-E180P600T6L	1000	850		1800		600	550	16	E180 Model 11
CDI-E180G600T6L	1000	850		1800		600	550	16	E180 Model 11
CDI-E180P700T6L	1000	850		1800		600	550	16	E180 Model 11
CDI-E180G700T6L	1000	850		1800		600	550	16	E180 Model 11

E100/E102/E106 (0.4kW ~ 630kW)

The CDI-E102 series inverter features optimized open-loop vector control and V/F control, delivering stable performance and enhanced functionality. It retains commonly used configurations, offering a higher cost-performance ratio.

Application Fields:
Primarily suited for applications that requirecertain input/output functionalities but do not need closed-loop vector control, such as die-cutting machines, engraving machinery, textile machinery glass machinery, printing and dyeing machinery, etc.



Optional Accessories:
External keyboard, external extension cable.

*The product parameters, motor power, and dimensional drawings of the E100 series are consistent with those of the E102 series.
*The E106 series shares the same appearance and dimensions as the E102 series, but features a control terminal with three relay interfaces. Its parameter design has been specifically optimized, and with dedicated programming, it better meets the requirements of constant pressure water supply operations.

Product Selection

The power models of E100, E102, and E106 are the same

Type	Rated capacity (kVA)	Rated input current (A)	Rated output current (A)	Matchable Motor (kW)	Brake unit	D.C. reactor
S2 (Single-phase 220V, 50/60Hz)						
CDI-E102G0R4S2B	0.8	5	2.3	0.4	Built-in as standard configuration	/
CDI-E102G0R75S2B	1.5	9	4	0.75		
CDI-E102G1R5S2B	2.7	15.7	7	1.5		
CDI-E102G2R2S2B	3.8	27	10	2.2		
T2 (Three-phase 220V, 50/60Hz)						
CDI-E102G0R4T2B	0.8	2.6	2.3	0.4	Built-in as standard configuration	/
CDI-E102G0R75T2B	1.5	6	4	0.75		
CDI-E102G1R5T2B	2.7	8.8	7	1.5		
CDI-E102G2R2T2B	3.8	12.5	10	2.2		
CDI-E102G3R7T2B	6.5	20.5	17	3.7		
CDI-E102G5R5T2B	9.6	26	25	5.5		
CDI-E102G7R5T2BL	12.2	35	32	7.5		Built-in
CDI-E102G011T2	17.2	46.5	45	11	/	/
CDI-E102G015T2	22.9	62	60	15		
CDI-E102G018.5T2	28.6	76	75	18.5		
CDI-E102G022T2	34.3	92	90	22		
CDI-E102G030T2	42	113	110	30		
CDI-E102G037T2	58	157	152	37		
CDI-E102G045T2	67	180	176	45		
CDI-E102G055T2	80	214	210	55		
CDI-E102G075T2	116	305	304	75		

Product Selection

Type	Rated capacity (kVA)	Rated input current (A)	Rated output current (A)	Matchable Motor (kW)	Brake unit	D.C. reactor
T4 (Three-phase 380V, 50/60Hz)						
CDI-E102G0R75T4B	1.5	4.4	3	0.75	Built-in as standard configuration	/
CDI-E102G1R5T4B	3	6	4.5	1.5		
CDI-E102G2R2T4B	4	6.8	6	2.2		
CDI-E102G3R7T4B	5.9	11	9.5	3.7		
CDI-E102G5R5/P7R5T4B	8.5/11	15.5/20.5	13/17	5.5/7.5		
CDI-E102G7R5/P011T4B	11/17	20.5/26	17/25	7.5/11		
CDI-E102G011/P015T4BL	17/21	26/35	25/32	11/15		Built-in as standard configuration
CDI-E102G015/P018.5T4BL	21/24	35/38.5	32/37	15/18.5		
CDI-E102G018.5/P022T4	24/30	38.5/46.5	37/45	18.5/22	Built-in as option configuration	Built-in as option configuration
CDI-E102G022/P030T4	30/40	46.5/62	45/60	22/30		
CDI-E102G030/P037T4	40/50	62/76	60/75	30/37		
CDI-E102G037/P045T4	50/60	76/92	75/90	37/45		External connection as option configuration
CDI-E102G045/P055T4	60/72	92/113	90/110	45/55		
CDI-E102G055/P075T4	72/100	113/157	110/152	55/75		
CDI-E102G075/P093T4	100/116	157/180	152/176	75/93		
CDI-E102G093/P110T4	116/138	180/214	176/210	93/110		
CDI-E102G110/P132T4	138/167	214/256	210/253	110/132		
CDI-E102G132/P160T4	167/200	256/305	253/300	132/160	External connection as option configuration	Built-in as standard configuration
CDI-E102G160/P185T4	200/224	305/344	300/340	160/185		
CDI-E102G185/P200T4	224/250	344/383	340/380	182/200		
CDI-E102G200/P220T4L	250/276	383/425	380/420	200/220		
CDI-E102G220T4L	276	425	420	220		
CDI-E102P250T4L	316	484	480	250		
CDI-E102G250/P280T4L	316/355	484/543	480/540	250/280		
CDI-E102G280/P315T4L	355/395	543/605	540/600	280/315		
CDI-E102G315/P355T4L	395/467	605/714	600/680	315/355		
CDI-E102G355/P375T4L	447/467	683/714	680/710	355/375		
CDI-E102G375/400T4L	467/494	714/753	710/750	375/400		
CDI-E102G400T4L	494	753	750	400		
CDI-E102P500T4L	612	934	930	500		
CDI-E102G500T4L	612	934	930	500		
CDI-E102G630T4L	790	1206	1200	630		

Appearance and installation dimensions

（Unit：mm）

Model 1 ~ Model 2

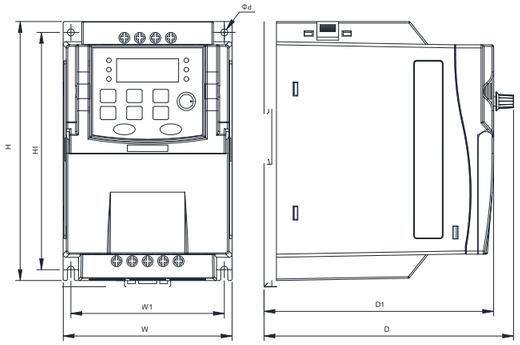

Model 3 ~ Model 4

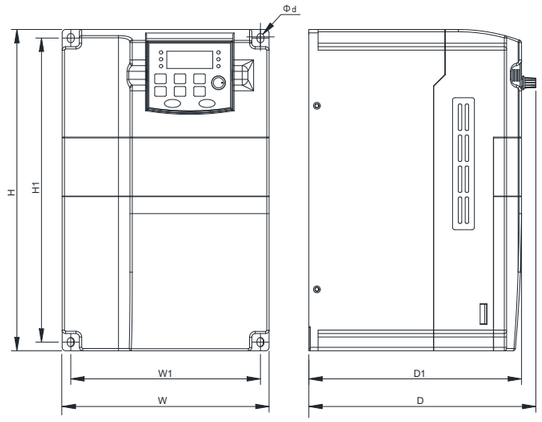

Model 5 ~ Model 6

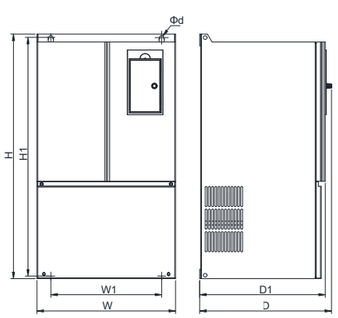

Model 7 ~ Model 8

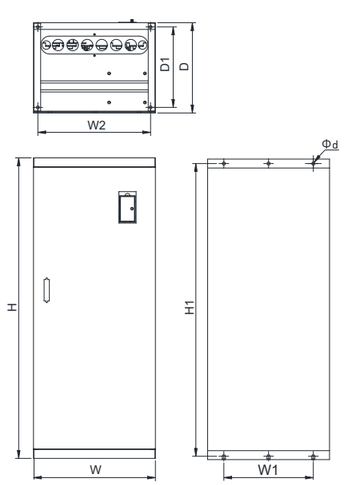

Model 9

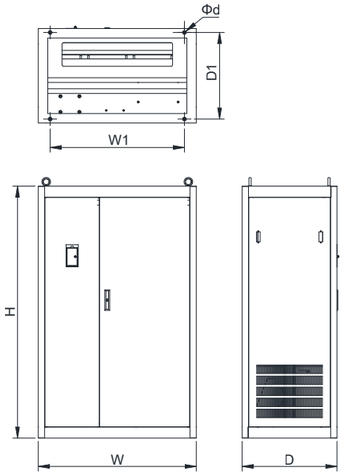

Inverter model	Overall installation dimensions(mm)								Dimension diagram
	W	W1	W2	H	H1	D	D1	Φd	
CDI-E102G0R4S2B	109	99		167	153	161	148	5	Model 1
CDI-E102G0R75S2B	109	99		167	153	161	148	5	Model 1
CDI-E102G1R5S2B	109	99		167	153	161	148	5	Model 1
CDI-E102G2R2S2B	135	122		167	153	171	158	5	Model 2

Appearance and installation dimensions

（Unit：mm）

Inverter model	Overall installation dimensions(mm)								Dimension diagram
	W	W1	W2	H	H1	D	D1	Φd	
CDI-E102G0R4T2B	109	99		167	153	161	148	5	Model 1
CDI-E102G0R75T2B	109	99		167	153	161	148	5	Model 1
CDI-E102G1R5T2B	135	122		167	153	171	158	5	Model 2
CDI-E102G2R2T2B	135	122		167	153	171	158	5	Model 2
CDI-E102G3R7T2B	180	165		280	265	221	208.5	5.5	Model 3
CDI-E102G5R5T2B	230	215		310	295	206	193.5	5.5	Model 3
CDI-E102G7R5T2BL	230	215		310	295	206	193.5	5.5	Model 3
CDI-E102G011T2	260	245		340	325	223	210.5	5.5	Model 4
CDI-E102G015T2	250	160		430	415	235.5	222	7	Model 5
CDI-E102G018.5T2	250	160		430	415	235.5	222	7	Model5
CDI-E102G022T2	300	240		530	515	285.5	270	9	Model 6
CDI-E102G030T2	300	240		530	515	285.5	270	9	Model 6
CDI-E102G037T2	340	260		580	565	328.5	313	9	Model 6
CDI-E102G045T2	340	260		580	565	328.5	313	9	Model 6
CDI-E102G055T2	340	260		580	565	328.5	313	9	Model 6
CDI-E102G075T2	400	300	365	940	910	370	336	13	Model 7
CDI-E102G0R75T4B	109	99		167	153	161	148	5	Model 1
CDI-E102G1R5T4B	109	99		167	153	161	148	5	Model 1
CDI-E102G2R2T4B	109	99		167	153	161	148	5	Model 1
CDI-E102G3R7T4B	135	122		167	153	171	158	5	Model 2
CDI-E102G5R5/P7R5T4B	180	165		280	265	221	208.5	5.5	Model 3
CDI-E102G7R5/P011T4B	180	165		280	265	221	208.5	5.5	Model 3
CDI-E102G011/P015T4BL	230	215		310	295	206	193.5	5.5	Model 3
CDI-E102G015/P018.5T4BL	230	215		310	295	206	193.5	5.5	Model 3
CDI-E102G018.5/P022T4	260	245		340	325	223	210.5	5.5	Model 4
CDI-E102G022/P030T4	260	245		340	325	223	210.5	5.5	Model 4
CDI-E102G030/P037T4	250	160		430	415	235.5	222	7	Model 5
CDI-E102G037/P045T4	250	160		430	415	235.5	222	7	Model 5
CDI-E102G045/P055T4	300	240		530	515	285.5	272	9	Model 6
CDI-E102G055/P075T4	300	240		530	515	285.5	272	9	Model 6
CDI-E102G075/P093T4	340	260		580	565	328.5	313	9	Model 6
CDI-E102G093/P110T4	340	260		580	565	328.5	313	9	Model 6
CDI-E102G110/P132T4	340	260		580	565	328.5	313	9	Model 6
CDI-E102G132/P160T4	400	300	365	940	910	370	336	13	Model 7
CDI-E102G160/P185T4	400	300	365	940	910	370	336	13	Model 7
CDI-E102G185/P200T4	400	300	365	940	910	370	336	13	Model 7
CDI-E102G200/P220T4L	514	400	475	1235	1200	404	360	14	Model 8
CDI-E102G220T4L	514	400	475	1235	1200	404	360	14	Model 8
CDI-E102P250T4L	514	400	475	1235	1200	404	360	14	Model 8
CDI-E102G250/P280T4L	545	400	504	1345	1310	404	360	14	Model 8
CDI-E102G280/P315T4L	545	400	504	1345	1310	404	360	14	Model 8
CDI-E102G315/P355T4L	545	400	504	1345	1310	404	360	14	Model 8
CDI-E102G355/P375T4L	545	400	504	1450	1415	404	360	14	Model 8
CDI-E102G375/P400T4L	545	400	504	1450	1415	404	360	14	Model 8
CDI-E102G400T4L	545	400	504	1450	1415	404	360	14	Model 8
CDI-E102P500T4L	1000	850		1600		600	550	M16	Model 9
CDI-E102G500T4L	1000	850		1600		600	550	M16	Model 9
CDI-E102G630T4L	1000	850		1600		600	550	M16	Model 9

*The dimensions of models E100, E102, and E106 with the same power are identical

EM60/EM61 (0.75kW ~ 22kW)

Product Introduction:
Featuring optimized open-loop vector control and V/F control, this compact low-power model delivers stable performance and enhanced functionality. It comes with standard configurations for common user needs and can be expanded with multiple I/O interfaces and communication capabilities.

Application Scenarios:
Primarily used in applications requiring certain input and output functions without closed-loop vector control. Suitable for die-cutting machines，engraving machinery, textile machinery, glass machinery, printing and dyeing machinery, staplers, automated production lines, food machinery, and more.



*The product specifications, motor power ratings, and dimensional drawings of the CDI-EM61 series are identical to those of the CDI-EM60 series.
*The CDI-EM61 comes standard with a 485 communication interface and does not support other expansion cards.
*The CDI-EM60 supports a 485 communication expansion card as well as other expansion cards.

Expansion card

Name	Specification	Description
EM60 communication expansion card	EM60-485	SG+: 485 communication positive signal terminal ,SG-: 485 negative communication signal terminal Support MODBUS-RTU protocol
EM60-IO expansion card	EM60-IO	2-way digital input (DI5~DI6),1-way analog input (VF2),1-way analog output (FM2) RS-485 communication interface (SG+, SG-)
EM60-IO2-1 expansion card	EM60-IO2-1	2-way digital input (DI5～DI6) ,1-way open-circuit collector output (Y3) SG+: 485 communication positive signal terminal,SG-: 485 communication negative signal terminal Supporting standard MODBUS-RTU agreement
EM60-IO2-2 expansion card	EM60-IO2-2	1-way open-circuit collector output (Y3)
EM60-IO2-3 expansion card	EM60-IO2-3	2-way digital input (DI5～DI6)
EM60-IO3-1 expansion card	EM60-IO3-1	2-way digital input (DI5～DI6),Multifunctional relay output T2 (T2A, T2B, T2C) SG+: 485 communication positive signal terminal,SG-: 485 communication negative signal terminal Supporting standard MODBUS-RTU agreement
EM60-IO3-2 expansion card	EM60-IO3-2	Multifunctional relay output T2 (T2A, T2B, T2C)
EM60-CanOpen expansion card	EM60-CanOpen	CANopen international universal field bus standard: CiA301, all devices which support this protocol can be connected to CANopen network.

Product Selection

Type	Rated capacity (kVA)	Rated input current (A)	Rated output current (A)	Matchable Motor (kW)
S1 (Single-phase 110V, 50/60Hz)				
CDI-EM60G0R75S1	1.4	26.25	7	0.75
CDI-EM60G1R5S1	2.5	48.75	13	1.5
S2 (Single-phase 220V, 50/60Hz)				
CDI-EM60G0R4S2	0.8	5	3	0.4
CDI-EM60G0R4S2B	0.8	5	3	0.4
CDI-EM60G0R75S2	1.9	9	5	0.75
CDI-EM60G0R75S2B	1.9	9	5	0.75
CDI-EM60G1R1S2	2	10.1	5.2	1.1
CDI-EM60G1R1S2B	2	10.1	5.2	1.1
CDI-EM60G1R5MS2	2	11.7	6.5	1.5
CDI-EM60G1R5MS2B	2	11.7	6.5	1.5
CDI-EM60G1R5S2	2.7	15.7	7	1.5
CDI-EM60G1R5S2B	2.7	15.7	7	1.5
CDI-EM60G2R2S2	3.8	27	10	2.2
CDI-EM60G2R2S2B	3.8	27	10	2.2
CDI-EM60G3R7S2B	7.3	33	17	3.7
CDI-EM60G5R5S2B	10.7	48.6	25	5.5
CDI-EM60G7R5S2B	13.7	62.2	32	7.5
T2 (Three-phase 220V, 50/60Hz)				
CDI-EM60G2R2T2B	5.9	10.5	10	2.2
CDI-EM60G3R7T2B	8.5	15.5	17	3.7
CDI-EM60G5R5T2B	17	26	25	5.5
CDI-EM60G7R5T2B	21	35	32	7.5
T4 (Three-phase 380V, 50/60Hz)				
CDI-EM60G0R75T4B	1.5	4.4	3	0.75
CDI-EM60G1R5T4B	3	6	4.5	1.5
CDI-EM60G2R2T4B	4	6.8	6	2.2
CDI-EM60G3R7T4B	5.9	11	9.5	3.7
CDI-EM60G5R5T4B	8.5	15.5	13	5.5
CDI-EM60G7R5T4B	11	20.5	17	7.5
CDI-EM60G011T4B	17	26	25	11
CDI-EM60G015T4B	21	35	32	15
CDI-EM60G018.5T4B	24	38.5	37	18.5
CDI-EM60G022T4B	30	46.5	45	22

Appearance and installation dimensions

(Unit: mm)

Model 1

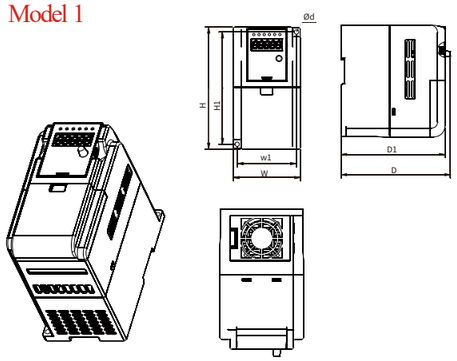

Model 2

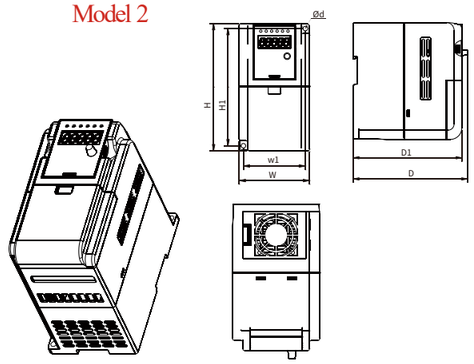

Model 3

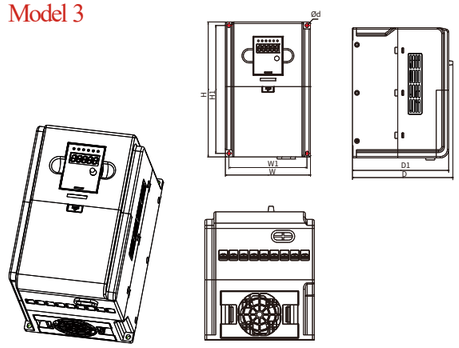

Model 4

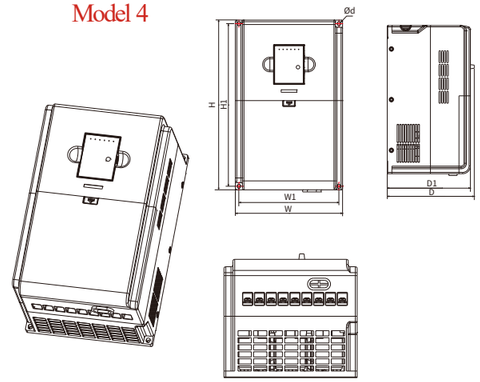

Model 5

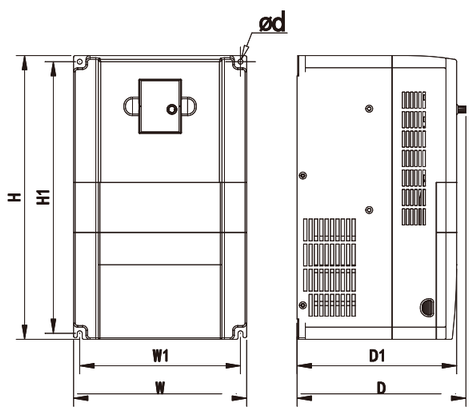

Appearance and installation dimensions

(Unit: mm)

Inverter model	Overall installation dimensions(mm)							Dimension diagram
	W	W1	H	H1	D	D1	Φd	
CDI-EM60G0R75S1	84	74	152	140	154	141	5.5	EM60 Model 1
CDI-EM60G0R4S2								
CDI-EM60G0R4S2B								
CDI-EM60G0R75S2								
CDI-EM60G0R75S2B								
CDI-EM60G1R1S2								
CDI-EM60G1R1S2B								
CDI-EM60G1R5MS2								
CDI-EM60G1R5MS2B								
CDI-EM60G0R75T4B	84	77	152	144	154	141	4.5	EM60 Model 1
CDI-EM60G1R5T4B								
CDI-EM60G2R2MT4B								
CDI-EM60G1R5S1	105	95	165	153	166	154	5.5	EM60 Model 2
CDI-EM60G1R5S2								
CDI-EM60G1R5S2B								
CDI-EM60G2R2S2								
CDI-EM60G2R2S2B								
CDI-EM60G1R5T2B	105	95	165	155	166	154	4.5	EM60 Model 2
CDI-EM60G2R2T2B								
CDI-EM60G2R2T4B								
CDI-EM60G3R7T4B								
CDI-EM60G3R7S2B	145	133	230	218	181	170	5.5	EM60 Model 3
CDI-EM60G3R7T2B								
CDI-EM60G5R5T4B								
CDI-EM60G7R5T4B								
CDI-EM60G5R5S2B	180	168	285	273	171	160	5.5	EM60 Model 4
CDI-EM60G7R5S2B								
CDI-EM60G5R5T2B								
CDI-EM60G7R5T2B								
CDI-EM60G011T4B								
CDI-EM60G015T4B								
CDI-EM60G018.5T4B	210	195	350	335	205	193.5	6	EM60 Model 5
CDI-EM60G022T4B								

E Series（E180/E102/E100/EM60）Technical specifications

Item			Specification
Control	Control mode		V/F Control, Open-loop Vector Control (SVC) Closed-loop Vector Control (VC) (Invalid for E100/E102/EM60series)
	Frequency Resolution		Digital: 0.02% Analog: 0.1%
	V/F curve		Linear, square root, random V/F
	Overload Capability		G Model: 60s for 150% of the rated current; 3s for 180% of the rated current
			P Model: 60s for 120% of the rated current; 3s for 150% of the rated current
	Start Torque		G Model: 0.5Hz/150% (SVC); 0Hz/180% (VC) . P Model: 0.5Hz/100%
	Speed Regulation Rang		1:100 (SVC) 1:1000 (VC)
	Stable Speed Accuracy		±0.5% (SVC) ±0.02% (VC)
	Torque Control Accuracy		±5% (VC)
	Torque Compensation		Manual torque compensation (0.1%~30.0%), automatic torque compensation
Configuration	Control power supply P24V	E180/E100	Max. Output Current 300mA with current-limiting protection
		E102	Max. Output Current 300mA without current-limiting protection
		EM60	Max. output current 300mA
	Input terminal	E180	6-way Digital Input Terminal (DI1~DI6),in which DI6 can access to high-speed Impulse Input. Through external I/O expansion card, it can be expanded to 4-way(DI7~DI10). 2-way Analog Input Terminal (VF1, VF2), which can be used as voltage (0V~10V) or current (0/4mA~20mA) input. It can be used as Digital Input Terminal through setting NOTE: Both internal power supply and external power supply can be used for DI1～DI6, only internal power supply can be used for DI7～DI10.
		E100	6-way Digital Input Terminal (DI1~DI6), in which D16 can access to high-speed Impulse Input (both built-in and external power supply are available). 2-way Analog Input Terminal (VF1, VF2), which can be used as voltage (0V~10V) or current (0/4mA~20mA) input. It can be used as Digital Input Terminal through reference.
		E102	5-way Digital Input Terminal (DI1~DI6), in which D16 can access to high-speed Impulse Input (only internal power supply is available) 2-way Analog Input Terminal (VF1, VF2), which can be used as voltage (0V~10V) or current (0/4mA~20mA) input. It can be used as Digital Input Terminal through reference.
		EM60	The 4-way Digital Input Terminal (DI1-DI4) can be additionally expanded by 2-way (DI5-DI6) through connecting with the IO expansion card, DI6 can be connected with the high speed impulse input 1-way analog input terminal (VF1) which can be additionally expanded by 1-way (VF2) through connecting with the IO expansion card, and it can be also used as digital input terminal via setting. Operating instruction: VF1 can serve as the voltage (0V-10V) or current (0/4mA~20mA) input, however, VF2 can only serve as voltage (0V~10V) input.
	Output Terminal	E180	2-way Analog Input Terminal (FM1, FM2), which can not only be used as output voltage (0V~10V),but output current (0mA~20mA) 1-way open collector output (YO), DC 48V 50Ma below. Additional 2-way open collector output (YO1, YO2) can be added through external IO expansion card. 1-way Impulse output (FMP), Frequency Range between 0.01kHz~100.00kHz 2-way Relay Output (T1, T2), DC 30V/3A below w and AC 250V/3A below Note: YO and FMP are common YO/FMP terminal, but only one can be used at the same time.
		E100	2-way Analog Input Terminal (FM1, FM2), which can not only be used as output voltage (0V~10V),but output current (0mA~20mA) 1-way open collector output (YO), DC 48V 50Ma below , 1-way Impulse output (FMP), Frequency Range between 0.01kHz~100.00kHz, 2-way Relay Output (T1, T2), DC 30V/3A below and AC 250V/3A below Note: YO and FMP are common YO/FMP terminal, but only one can be used at the same time.
		E102	1-way Analog Input Terminal FM1, which can not only be used as output voltage (0V~10V),but output current (0mA~20mA). 1-way Relay Output T1, DC 30V/3A below and AC 250V/3A below
		EM60	The 1-way Analog Output Terminal FM1 can be additionally expanded by 1-way (FM2) through connecting with the IO expansion card, both the voltage (0V-10V) and current (0mA~20mA) can be output, the 1-way relay outputs T1, below 30V/3A for DC and below 250V/3A for AC.

E Series（E180/E102/E100/EM60）Technical specifications

Item			Specification
Running	Operating mode		Keyboard, terminal, RS485 communication
	Frequency Source		14 kinds of main frequency sources and 14 kinds of auxiliary sources. Adopt various combination modes to switch. Diversification to Each Frequency Source Input Mode: keyboard potentiometer, external analog, digital reference, impulse reference, Multiplex Directive, simple PLC, communication, arithmetic results, etc.
	Torque Source		14 kinds of Torque Sources, including digital reference, external analog, impulse reference, Multiplex Directive, communication, arithmetic results, etc.
	Acceleration and Deceleration Time		Four groups of straight lines (select the terminal to switch through acceleration and deceleration time), S Curve 1 and S Curve 2
	Emergency stop		Interrupt output of frequency inverter.
	Multiplex Speed		16 speed is allowable to set at most and use various combination of multiplex directive terminal to switch
	Simple PLC Function		Continuously run 16-phase speed and independently set acceleration and deceleration time and running time
	Jogging Control		Independently set Jogging frequency and jogging acceleration and deceleration time, additionally, set the unit under running state and confirm whether the jogging is preferential
	Rotating Speed Tracking		Frequency inverter starts operation by tracking the load speed
	Fixed-length and Fixed-distance Control		Realize fixed-length and fixed-distance control function through Impulse Input
	Control mode		Realize counting function through Impulse Input
Running	Wobbulating Function		Apply for textile winding equipment
	Built-in PID		Realize process control closed loop system
	AVR Function		When the gird voltage fluctuates, ensure constant output
	DC Braking		Realize fast and stable shut-down
	Slip Compensation		Compensate the speed deviation caused by the increase of load
	Hopping Frequency		Prevent resonance from occurring with load
	Sagged Function		Balance the load of multiple motors with same load
	Timing Control		Be able to realize automatic shutdown of the frequency inverter when reaching given time
	Built-in Virtual Delay Relay		Realize simple logic Programming to multi-functional output terminal function and digital input terminal signal, the logic results can not only be equivalent to digital input terminal function, but can be output through multi-functional terminal output
	Built-in Timer		Build in 2 timers and acquire the timing input signal to realize timing signal output. Use alone or in combination
	Operation Module Built-in Operation Module		One built-in 4-way Operation Module to realize simple addition, subtraction, multiplication and division, size judgment and integral operation
Communication	E180/E100/E102		The control panel is directly equipped with RS485,Communication Interface and supports Standard MODBUS Protocol
	EM60		The control panel isn't equipped with RS485 communication interface, and an external communication expansion card is needed. The standard MODBUS-RTU protocol (connected with EM60-485 expansion card) is supported.
Encoder	E180		The control panel is not equipped with encoder interface, so external encoder expansion card is required. It supports ABZ Incremental Encoder, UVW Incremental Encoder and Rotary Transformer. This encoder connection method can realize high-performance closed-loop vector control and be used for occasions with high requirements to control accuracy.
	E100		Be able to connect the encoder through Terminal DI5 & DI6 on control panel, such an encoder connection method can realize simple closed-loop control through PID Control and used for occasions without high requirements to control accuracy.
	E102		Only connect to 1-way pulse signal of encoder (DI6)
	EM60		Only the 1-way pulse signal (DI6) of encoder can be connected.
Type of Motor	E180/E100/E102		It is fitted with either asynchronous motor or synchronous motor which needs customizing (UV600).
	EM60		Not only be equipped with asynchronous motor, but synchronous motor. asynchronous software UV100, synchronous software UV600
Display	Operation information		Given frequency, output current, output voltage, bus voltage, input signal, feedback value, module temperature, output frequency, motor synchronous speed, etc. Through >> Key, display 32 loops at most
	Error message		Save the historical information of 3 faults under running state of fault protection. Every piece of fault information includes frequency, current, bus voltage and input/output terminal status when fault happens.

E Series（E180/E102/E100/EM60）Technical specifications

Item		Specification
Protection	Frequency inverter protection	Overcurrent, overvoltage, module fault protection, undervoltage, overload, external fault protection, EEPROM fault protection, ground protection, default phase,etc.
	Frequency inverter alarm	Locked rotor protection, overload alarm.
	Instant power-down	Lower than 15 ms: Continuous operation Bigger than 15 ms: Automatic restart is allowable
Environment	Ambient temperature	-10℃~40℃
	Storage temperature	-20℃~65℃
	Ambient humidity	90 % RH in max .(no dewing)
	Height/vibration	Below 1,000 m, below 5.9m/sec² (=0.6g)
	Application position	No corrosive gas, inflammable gas, oil mist, dust and others
Cooling		Air-blast cooling

E180 expansion card

Name	Specification	Description
E180-IO1 Expansion Card	E180-IO1	4-way Digital Input (DI7~DI10)，1-way Analog Input (VF3)，2-way Multi-functional Open Collector Output (YO1、YO2)，RS-485 Communication Interface (SG+,SG-)
E180-IO2 Expansion Card	E180-IO2	4-way Digital Input (DI7~DI10),1-way Analog Input (VF3) 2-way Multi-functional Open Collector Output (YO1、YO2)
E180 Encoder Expansion Card 1	E180-PG1	Support A, B, Z differential input without frequency division output,Max.Speed:100kHz Differential Input Signal Amplitude: ≤7V
E180 Encoder Expansion Card 2	E180-PG2	Support A, B, Z, U, V, W differential input without frequency division output,Max.Speed:100kHz Differential Input Signal Amplitude: ≤7V
E180 Encoder Expansion Card 3	E180-PG3	Support A, B, Z open collector input,Max speed: 100kHz
E180 Rotary Transformer Expansion Card 4	E180-PG4	Support Rotary Transformer,10kHz 7VRMS excitation output,12-digit resolution Without frequency division output
E180 Communication Expansion Card	E180-485	SG+: Positive Signal Terminal of RS485 Communication, SG-: Negative Signal Terminal of RS485 Communication,Support MODBUS-RTU Protocol
E180 Expansion Card of Injection Molding Machine	E180-ZS	2-way Digital Input Terminal (DI7~DI8) Refer to Description for use of specific functions of Function Code P2.0.06~P2.0.07 Note: Only internal power supply is applicable
		2-way Analog Input Terminal (G1-S1, G2-S2) G1:Connect proportional flow signal negative S1:Connect proportional flow signal positive G2:Connect proportional voltage signal negative S2:Connect proportional voltage signal positive Note: proportional flow and proportional voltage signal are DC Current Signal 0~1A, and corrective wiring shall be made according to the flow of circuit current
E180-DP Expansion Card	E180-DP	Used for E180 Series inverters and realizing PROFIBUS communication to PROFIBUS-DP master station. Description: The E180-DP card is only supported by the E180 series inverter with the model number including DP and the power above 3.7kW, the user shall pay special attention to the requirement. For example: CDI-E180G3R7/P5R5T4B(DP).
E180-WSP Expansion Card	E180-WSP	Realize automatic control of 4 main pumps + 1 sub-pump. (Note: only the models 5.5 kW and above support E180-WSP card)
E180-ProfiNet Communication Expansion Card 1	E180-PN1	Support standard PROFINET protocol,E180 series supports optional E180-PN1 card (not compatible with PG expansion card)
E180-ProfiNet Communication Expansion Card 1	E180-PN2	Support standard PROFINET protocol,Optional E180-PN2 card is supported by 3.7kW and above model (compatible with PG expansion card)
E180-EtherNet communication expansion card	E180-EN	E180 EN expansion card,Support standard EtherNet protocol E180 series supports optional E180 EN card (not compatible with PG expansion card)
E180-EtherCat Expanded Communication Card	E180-EtherCat	E180-EtherCat expanded card Up to the GBT 31230 standard,Support the EtherCat protocol Only a product of 3.7 kW or above under the E180 series supports the option of E180-EtherCat card (also compatible with a PG expanded card)
E180-CanOpen expansion card	E180-CanOpen	CANopen international universal field bus standard: CiA301, all devices which support this protocol can be connected to CANopen network.All series of E180 support optional CanOpen card (compatible with PG expansion card)

E Series Keyboard keys & functions

LED/ELED

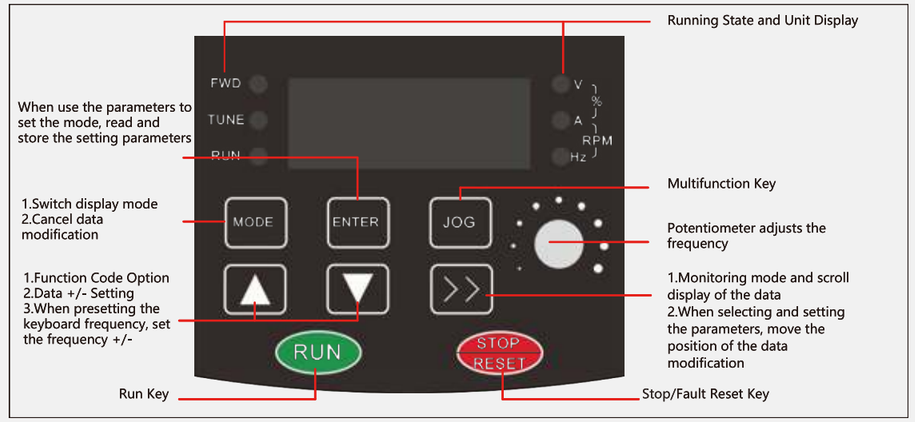

LCD/ELCD

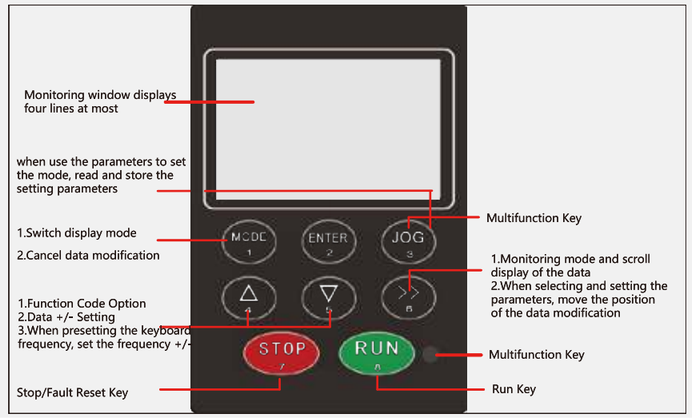

EM60

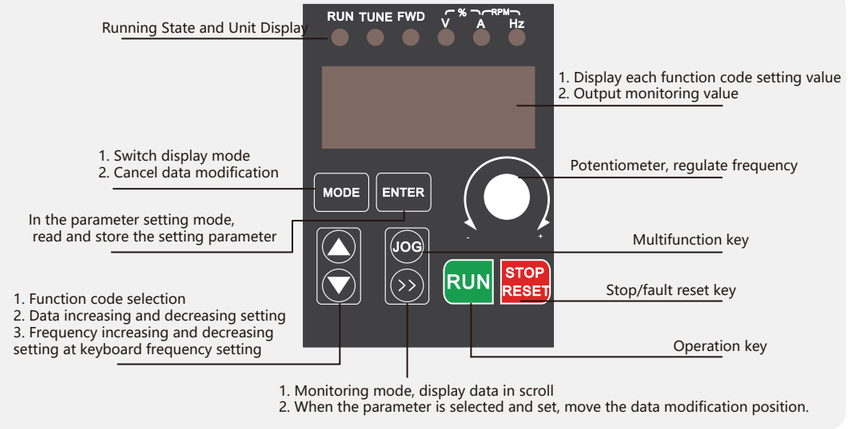

Installation dimensions of operation keyboard

LED

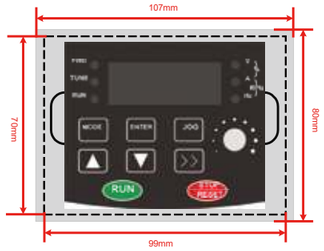

E100, E102 series LED keypad

Installation dimension of Keyboard Booth：99*70mm

Outer dimesion of Keyboard Booth：107*80mm



E180 series LED keypad

Installation dimension ：97*59mm

Outer dimesion ：105*67mm



E180 series LED keyboard

Installation dimension ：136*72mm

Outer dimesion ：142*78mm

LCD



E180 series LCD keypad

Installation dimension ：97*59mm

Outer dimesion ：105*67mm



E180 series LCD primary keypad

Installation dimension ：136*72mm

Outer dimesion ：142*78mm

ELCD



E180

Installation dimension ：97*59mm

Outer dimesion ：105*67mm



E180、E102

Installation dimension ：136*72mm

Outer dimesion ：142*78mm

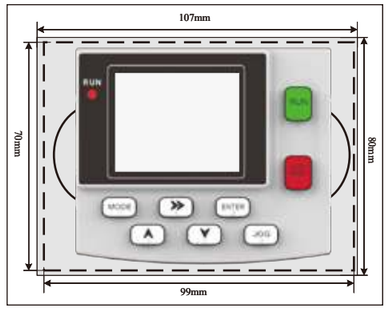

E102、E100

Installation dimension ：99*70mm

Outer dimesion ：107*80mm

Installation dimensions of operation keyboard

ELED



E180、E102 、E100

Installation dimension ：136*72mm

Outer dimesion ：142*78mm



E180、E102 、E100

Installation dimension ：136*72mm

Outer dimesion ：142*78mm



E180

Installation dimension ：97*59mm

Outer dimesion ：105*67mm

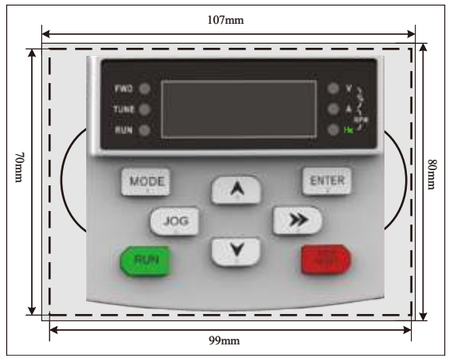

E102、E100

Installation dimension ：99*70mm

Outer dimesion ：107*80mm

LED



EM60 LED Keypad

Keyboard Hole Size: 77.5mm*59mm

Removable Keyboard Dimension: 83.5mm*65mm







DELIXI
ELECTRIC



Soft Starter

CDRA | CDRAK3 | CDRAZX

CDRA / CDRAK3 (11kW ~ 600kW)

The CDRA series fully digital intelligent AC motor soft starter is a new type of starting equipment with advanced level, which adopts power electronics technology, microprocessor technology and modern control theory technology. This product can effectively limit the starting current of asynchronous motors during startup, and can be widely used in heavy-duty equipment such as fans, water pump conveyors, and compressors. It is an ideal replacement for star/delta conversion, autotransformer voltage reduction, and other voltage reducing starting equipment. At the same time, it has multiple control modes such as keyboard control, external terminal control, and upper computer control, as well as functions such as fault relay output and analog signal output, making it more convenient and flexible to participate in the composition of the system.



Widely used in crusher loads, transmission loads, compressor loads, pump loads, and fan loads.computer control, as well as functions such as fault relay output and analog signal output, making it more convenient and flexible to participate in the composition of the system.

The CDRAK3 series has a built-in bypass contactor and control power supply. Simply connect the input terminal of the soft starter to the circuit breaker, and the motor can be directly connected to the output terminal of the soft starter and powered on to use.


Water pump


Crusher


Water cooling unit


Conveyor


Rolling mill


Air compressor

Nameplates and Naming Rules



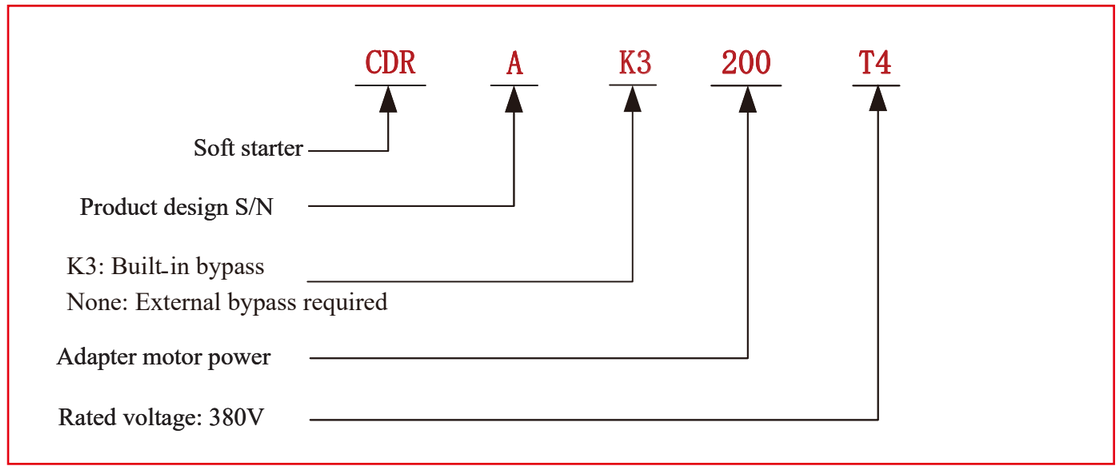

Product Selection

CDRA

Model	Rated Power (kW)	Rated Current (A)	Model of Circuit Breaker (QF)	Model of Bypass Contactor (KM)	Specification of Primary Wire
CDRA011T4	11	25	CDM1-63L/32	CJ20-25	6mm^2 cable
CDRA015T4	15	32	CDM1-63L/40	CJ20-40	10mm^2 cable
CDRA018T4	18.5	37	CDM1-63L/50	CJ20-40	10mm^2 cable
CDRA022T4	22	45	CDM1-63L/63	CJ20-63	16mm^2 cable
CDRA030T4	30	60	CDM1-100L/80	CJ20-63	25mm^2 cable
CDRA037T4	37	75	CDM1-100L/100	CJ20-100	35mm^2 cable
CDRA045T4	45	90	CDM1-225L/125	CJ20-100	35mm^2 cable
CDRA055T4	55	110	CDM1-225L/160	CJ20-160	35mm^2 cable

Product Selection

CDRA075T4	75	152	CDM1-225L/180	CJ20-160	35mm^2 cable
CDRA093T4	93	176	CDM1-225L/200	CJ20-250	30*3mm^2 copper bar
CDRA110T4	110	210	CDM1-400L/250	CJ20-250	30*3mm^2 copper bar
CDRA132T4	132	253	CDM1-400L/315	CJ20-400	30*4mm^2 copper bar
CDRA160T4	160	300	CDM1-400L/350	CJ20-400	30*4mm^2 copper bar
CDRA200T4	200	380	CDM1-400L/400	CJ20-400	40*4mm^2 copper bar
CDRA250T4	250	480	CDM1-630L/630	CJ20-630	40*5mm^2 copper bar
CDRA320T4	320	600	CDM1-800H/700	CJ40-800	40*5mm^2 copper bar
CDRA400T4	400	750	CDM1-800H/800	CJ40-1000	50*5mm^2 copper bar
CDRA450T4	450	892	CDM1-1250/1000	CJ40-1000	50*5mm^2 copper bar
CDRA500T4	500	930	CDM1-1250/1250	CJ40-1000	50*5mm^2 copper bar
CDRA600T4	600	1100	CDM1-1250/1250	CJ40-1000	50*5mm^2 copper bar

CDRAK3

Model	Rated Power (kW)	Rated Current (A)	Model of Circuit Breaker (QF)	Specification of Primary Wire
CDRAK3G011T4	11	25	CDM1-63L/32	6mm2cable
CDRAK3G015T4	15	32	CDM1-63L/40	10mm2cable
CDRAK3G018T4	18.5	37	CDM1-63L/50	10mm2cable
CDRAK3G022T4	22	45	CDM1-63L/63	16mm2cable
CDRAK3G030T4	30	60	CDM1-100L/80	25mm2cable
CDRAK3G037T4	37	75	CDM1-100L/100	35mm2cable
CDRAK3G045T4	45	90	CDM1-225L/125	35mm2cable
CDRAK3G055T4	55	110	CDM1-225L/160	35mm2cable
CDRAK3G075T4	75	152	CDM1-225L/180	35mm2cable
CDRAK3G093T4	93	176	CDM1-225L/200	30*3mm2 copper bar
CDRAK3G110T4	110	210	CDM1-400L/250	30*3mm2 copper bar
CDRAK3G132T4	132	253	CDM1-400L/315	30*4mm2 copper bar
CDRAK3G160T4	160	300	CDM1-400L/350	30*4mm2 copper bar
CDRAK3G200T4	200	380	CDM1-400L/400	40*4mm2 copper bar
CDRAK3G250T4	250	480	CDM1-630L/630	40*5mm2 copper bar
CDRAK3G320T4	320	600	CDM1-800H/700	40*5mm2 copper bar
CDRAK3G400T4	400	750	CDM1-800H/800	50*5mm2 copper bar
CDRAK3G450T4	450	892	CDM1-1250/1000	50*5mm2 copper bar
CDRAK3G500T4	500	930	CDM1-1250/1250	50*5mm2 copper bar
CDRAK3G600T4	600	1100	CDM1-1250/1250	50*5mm2 copper bar

Technical Specification

Operation	Operation control mode		Keyboard/external terminal/RS485 communication
	Start mode		Current limiting/voltage/heavy load
	Start/stop period		Digital setting supported
	Start delay		Digital setting supported
	Emergency stop		Interrupt output of soft starter
	Limiting current		Starting current is lower than this value under current limiting and heavy-load mode
	Initial voltage		Initial voltage supports digital setting under voltage mode
	Light-load control		Detect accidents such as belt tripping
	Restart		Support restart in case of shutdown due to a fault
	Fault output		Contact output - AC 250V 5A, DC 30V 5A
	Multifunction relay output		Start delay, start, running, stop, complete stop, restart
	Analog output		0~20mA / 4~20mA, optional
Protection Function	Soft starter protection		Overcurrent, overload, overheat, three-phase imbalance, default phase, light load, external fault
	Soft starter alarm		Emergency shutdown, light load and restart
Display	Keyboard	Running information	Ready condition, start delay, stating process, operation, stop, fault alarm
		Parameter protection	Set parameters are protected against modification
Working Conditions	Category of use		AC-53b
	Rated insulation voltage		660V. Rated impulse withstand voltage: 4kV
	Operation frequency		≤ 12 times/h
	Protection grade	IP20	CDRA011T4~CDRA055T4
		IP00	CDRA075T4~CDRA600T4
			CDRAK3G011T4～CDRAK3G600T4
	Rated limit short-circuit current		CDRA055T4: 6kA; CDRA160T4: 12kA;
			CDRA320T4: 20kA; CDRA600T4: 48kA;
			CDRAK3G075T4: 9.1kA; CDRAK3G160T4: 12kA;
			CDRAK3G320T4: 20kA CDRAK3G600T4: 48kA
Environment	Ambient temperature		-10 ℃ ~ 40 ℃
	Storage temperature		-20 ℃ ~ 65 ℃
	Ambient humidity		Max. 90 % RH. (no condensation)
	Height/vibration		Below 1,000 m; below 5.9m/s²(=0.6g)
	Application scenario		No corrosive gas, inflammable gas, oil mist, dust or others
Cooling Method	Natural air cooling		CDRA011T4~CDRA600T4; CDRAK3G011T4~CDRAK3G075T4
	Forced air cooling		CDRAK3G093T4~ CDRAK3G600T4

Shape and Mounting Dimensions(CDRA)

(Unit: mm)

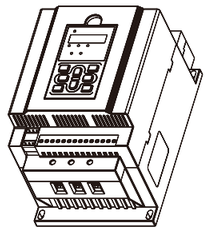

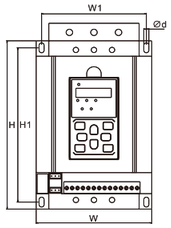

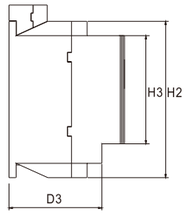

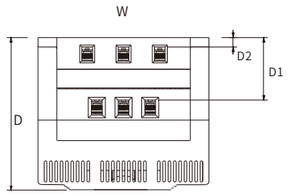

Model	W	W1	H	H1	H2	H3	D	D1	D2	D3	¢ d
CDRA011T4~ 055T4	160	145	265	220	240	166	165.8	67	10	111	8

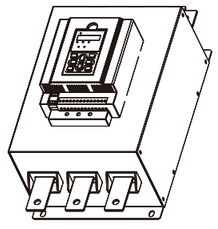

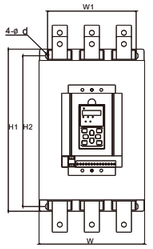

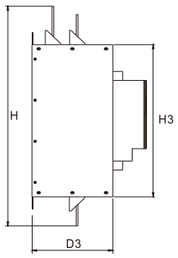

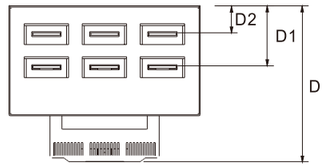

Model	W	W1	H	H1	H2	H3	D	D1	D2	D3	¢ d
CDRA075T4 ~160T4	280	230	534	430	395	370	256.8	98	44	180	10
CDRA200T4 ~ 320T4	310	265	594	475	440	415	256.8	98	44	180	10
CDRA400T4 ~ 600T4	416	375	740	555	520	495	276.8	106	44	200	10



CDRA011T4



CDRA075T4



CDRA200T4



Shape and Mounting Dimensions(CDRAK3)

(Unit: mm)

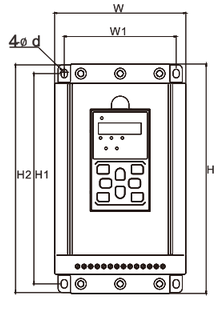



CDRAK3G011~G045T4

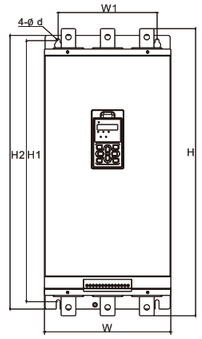

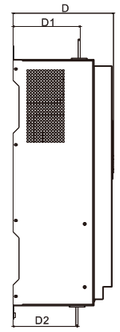

CDRAK3G055~G320T4

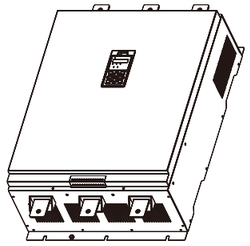

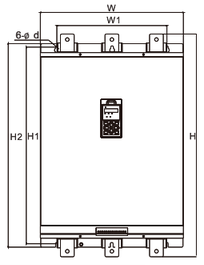

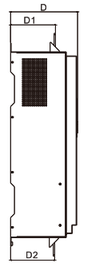

CDRAK3G400~G600T4

Model	W	W1	H	H1	H2	D	D1	D2	¢ d
CDRAK3G011~ G045T4	150	128	264	242	262	171.8	96	96	7
CDRAK3G055~ G075T4	200	165	384	345	360	229.3	137.5	137.5	7
CDRAK3G093~ G160T4	255	180	579	520	545	233.3	160	151	9
CDRAK3G200~ G320T4	300	235	684	620	650	238.3	159	154	9
CDRAK3G400~ G600T4	520	400	810	715	740	243.3	166	163	9



CDRAK3G030T4



CDRAK3G055T4



CDRAK3G093T4



CDRAK3G200T4



Schematic Diagram for Basic Wiring

CDRA

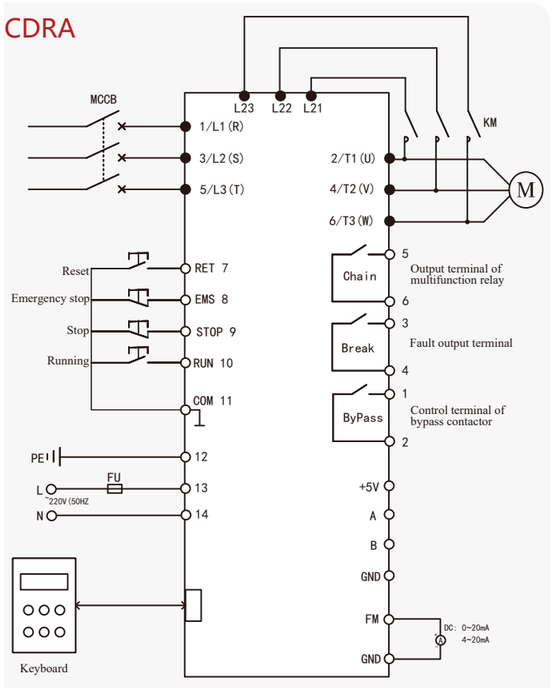

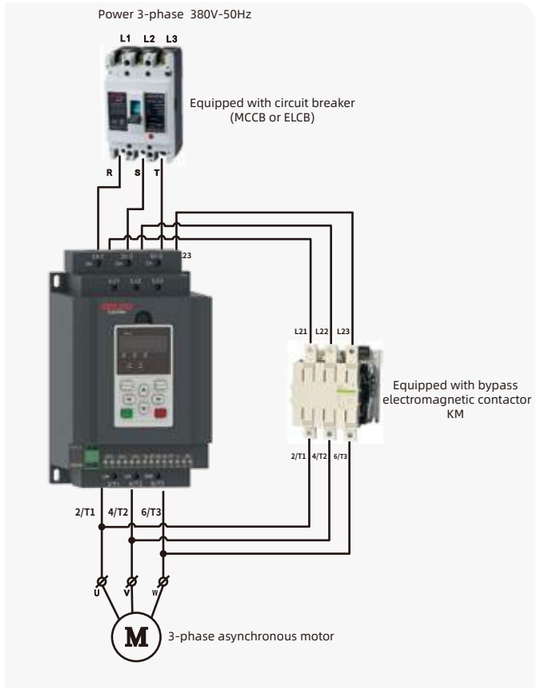

CDRAK3

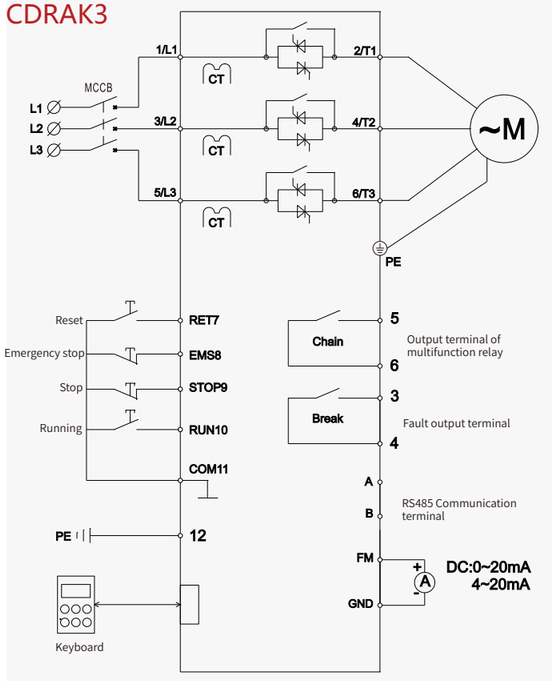

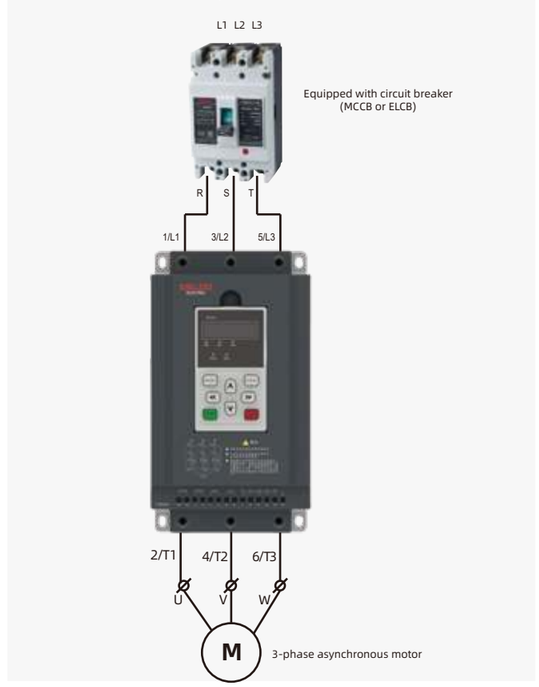

Keyboard and base dimensions

(Unit: mm)

Applicable to CDRA and CDRAK3

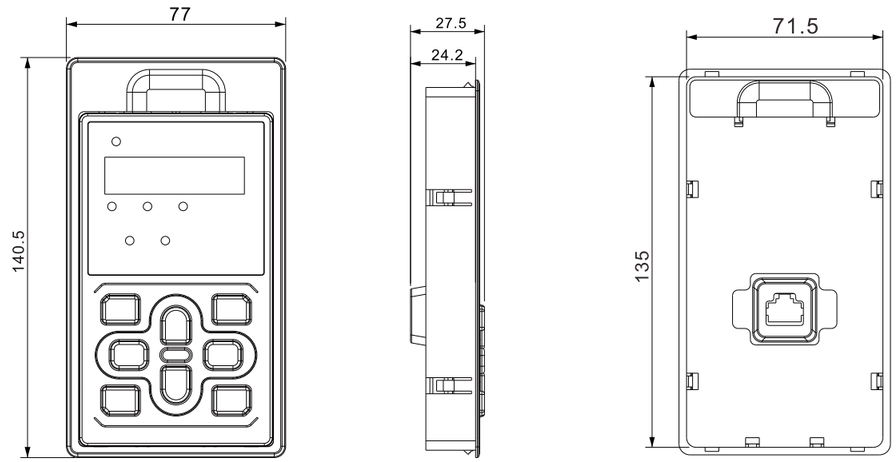

keyboard size

cutout size

CDRAZX

（7.5kW ~ 500kW）

The CDRAZX series of AC motor solid-state soft starters is a new type of motor starting equipment designed and produced using power electronics technology, microprocessor technology, and modern control theory, achieving internationally advanced levels.

This product effectively limits the starting current of asynchronous motors during startup and employs a unique protection algorithm to efficiently safeguard the motor and related equipment. It is widely used in loads such as fans, pumps, conveyors, and compressors, making it an ideal replacement for traditional step-down starting devices like star/delta converters, autotransformer step-down starters, and magnetic control step-down starters. It is applicable in various industries, including chemical engineering, mining, construction, power transmission and distribution equipment, and hydropower.



Product Selection

Model	Rated Power (kW)	Rated Current (A)	Model of Circuit Breaker (QF)	Specification of Primary Wire
Three-phase AC : T2 AC220V (-15%,+15%), 50Hz				
CDRAZX7R5T2	7.5	37	CDM1-63L/50	10mm2 cable
CDRAZX011T2	11	60	CDM1-100L/80	25mm2 cable
CDRAZX015T2	15	75	CDM1-100L/100	35mm2 cable
CDRAZX018T2	18.5	90	CDM1-225L/125	35mm2 cable
CDRAZX022T2	22	110	CDM1-225L/160	35mm2 cable
CDRAZX030T2	30	150	CDM1-225L/180	35mm2 cable
CDRAZX037T2	37	180	CDM1-225L/200	30*3mm2 copper bar
CDRAZX045T2	45	230	CDM1-400L/250	30*3mm2 copper bar
CDRAZX055T2	55	260	CDM1-400L/315	30*4mm2 copper bar
CDRAZX075T2	75	320	CDM1-400L/350	30*4mm2 copper bar
CDRAZX090T2	90	400	CDM1-630L/400	40*4mm2 copper bar
CDRAZX115T2	115	500	CDM1-630L/630	40*5mm2 copper bar
CDRAZX132T2	132	560	CDM1-800H/700	40*5mm2 copper bar
CDRAZX160T2	160	630	CDM1-800H/700	40*5mm2 copper bar
CDRAZX185T2	185	700	CDM1-800H/800	40*5mm2 copper bar
CDRAZX200T2	200	800	CDM1-1250/1000	50*5mm2 copper bar
CDRAZX220T2	220	900	CDM1-1250/1000	50*5mm2 copper bar
CDRAZX250T2	250	1000	CDM1-1250/1250	50*5mm2 copper bar

Product Selection

Model	Rated Power (kW)	Rated Current (A)	Model of Circuit Breaker (QF)	Specification of Primary Wire
Three-phase AC : T4 AC380V (-10%, +15%), 50Hz				
CDRAZX5R5T4	5.5	12	CDM1-63L/16	2.5mm2 cable
CDRAZX7R5T4	7.5	16	CDM1-63L/25	4mm2 cable
CDRAZX011T4	11	22	CDM1-63L/32	6mm2 cable
CDRAZX015T4	15	30	CDM1-63L/40	10mm2 cable
CDRAZX018T4	18.5	37	CDM1-63L/50	10mm2 cable
CDRAZX022T4	22	45	CDM1-63L/63	16mm2 cable
CDRAZX030T4	30	60	CDM1-100L/80	25mm2 cable
CDRAZX037T4	37	75	CDM1-100L/100	35mm2 cable
CDRAZX045T4	45	90	CDM1-225L/125	35mm2 cable
CDRAZX055T4	55	110	CDM1-225L/160	35mm2 cable
CDRAZX075T4	75	150	CDM1-225L/180	35mm2 cable
CDRAZX090T4	90	180	CDM1-225L/200	30*3mm2 copper bar
CDRAZX115T4	115	230	CDM1-400L/250	30*3mm2 copper bar
CDRAZX132T4	132	260	CDM1-400L/315	30*4mm2 copper bar
CDRAZX160T4	160	320	CDM1-400L/350	30*4mm2 copper bar
CDRAZX185T4	185	370	CDM1-400L/400	40*4mm2 copper bar
CDRAZX200T4	200	400	CDM1-630L/400	40*4mm2 copper bar
CDRAZX220T4	220	440	CDM1-630L/630	40*5mm2 copper bar
CDRAZX250T4	250	500	CDM1-630L/630	40*5mm2 copper bar
CDRAZX280T4	280	560	CDM1-800H/700	40*5mm2 copper bar
CDRAZX320T4	320	630	CDM1-800H/700	40*5mm2 copper bar
CDRAZX350T4	350	700	CDM1-800H/800	40*5mm2 copper bar
CDRAZX400T4	400	800	CDM1-1250/1000	50*5mm2 copper bar
CDRAZX450T4	450	900	CDM1-1250/1000	50*5mm2 copper bar
CDRAZX500T4	500	1000	CDM1-1250/1250	50*5mm2 copper bar

Shape and Mounting Dimensions

(Unit: mm)

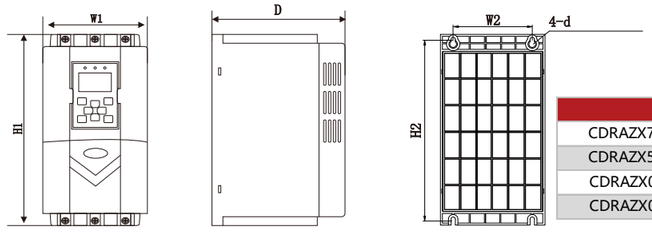

Model	W1	H1	D	W2	H2	¢ d
CDRAZX7R5T2 ~ 015T2 CDRAZX5R5T4 ~ 037T4	105	241	176	75	218	M5
CDRAZX018T2 ~ 030T2 CDRAZX045T4 ~ 075T4	142.5	295	191	121	278	M6

*Keyboard opening dimensions: Width 80.5 × Height 115 mm

Shape and Mounting Dimensions

(Unit: mm)

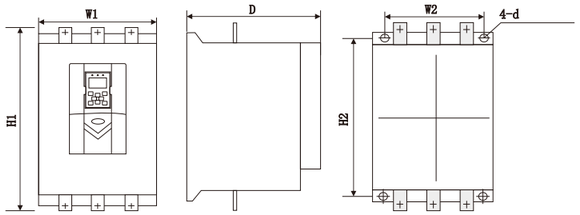

Model	W1	H1	D	W2	H2	¢ d
CDRAZX037T2 ~ 045T2	200	356	225	140	300	M8
CDRAZX090T4 ~ 115T4						
CDRAZX055T2 ~ 090T2	230	430	225	170	370	M8
CDRAZX132T4 ~ 200T4						
CDRAZX115T2 ~ 185T2	466	510	265	335	430	M8
CDRAZX220T4 ~ 350T4						
CDRAZX200T2 ~ 250T2	466	590	295	335	500	M8
CDRAZX400T4 ~ 500T4						

*Keyboard opening dimensions: Width 80.5 × Height 115 mm

Technical Specification

Operation	Operation control mode		Keyboard/external terminal/RS485 communication
	Start mode		Voltage ramp, voltage acceleration ramp, current ramp, current acceleration ramp
	Start/stop period		Digital setting supported
	Start delay		Digital setting supported
	Emergency stop		Interrupt output of soft starter
	Limiting current		Starting current is lower than this value under current limiting and heavy-load mode
	Initial voltage		Initial voltage supports digital setting under voltage mode
	Light-load control		Detect accidents such as belt tripping
	Fault output		Contact output 5.5kW~37kW: 5A/250VAC 5A/30VDC
			Contact output 45kW~500kW: 10A/277VAC 10A/30VDC
	Multifunction relay output		Operating state, starting state, soft stop state, fault state, thyristor fault, standby, current upper and lower limits, etc
	Analog output		4~20mA
Protection Function	Soft starter protection		Overcurrent, overload, overheat, three-phase imbalance, default phase, light load, external fault
	Soft starter alarm		Emergency shutdown, light load
Display	Keyboard	Running information	Ready condition, start delay, stating process, operation, stop, fault alarm
		Parameter protection	Set parameters are protected against modification
Working Conditions	Category of use		AC-53b
	Rated insulation voltage		660V. Rated impulse withstand voltage: 6kV
	Operation frequency		≤ 6 times/h
	Protection grade		IP00
	Rated limit short-circuit current		10kA
Environment	Ambient temperature		-25 ℃ ~ 40 ℃
	Storage temperature		-20 ℃ ~ 65 ℃
	Ambient humidity		Max. 90 % RH. (no condensation)
	Height/vibration		Below 2,000 m; below 0.5g
	Application scenario		No corrosive gas, inflammable gas, oil mist, dust or others
Cooling Method			Forced air cooling

Schematic Diagram for Basic Wiring

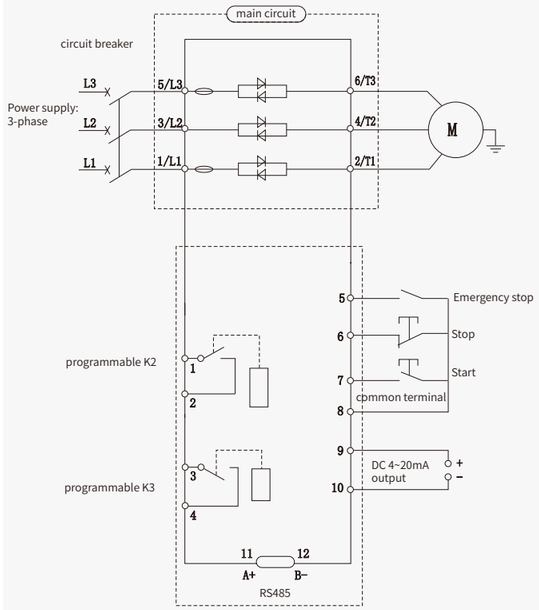

T2: 7.5kW ~ 15kW

T4: 5.5kW ~ 37kW

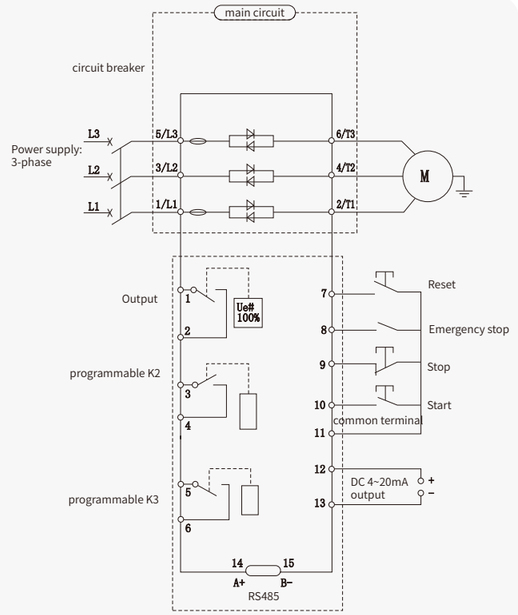

T2: 18.5kW ~ 250kW

T4: 45kW ~ 500kW

DELIXI
ELECTRIC
德力西电气

top EMPLOYER 杰出雇主 China 2026
FOR A BETTER WORLD OF WORK







